TRANSMISSION/TRANSAXLE

05
SECTION

ON-BOARD DIAGNOSTIC 05-02
SYMPTOM TROUBLESHOOTING 05-03
CLUTCH 05-10
MANUAL TRANSAXLE [G35M-R] 05-15A
MANUAL TRANSAXLE [A26M-R] 05-15B
MANUAL TRANSAXLE SHIFT MECHANISM 05-16
AUTOMATIC TRANSAXLE 05-17
AUTOMATIC TRANSAXLE SHIFT MECHANISM 05-18
TECHNICAL DATA 05-50
SERVICE TOOLS 05-60

05–02 ON-BOARD DIAGNOSTIC

AUTOMATIC TRANSAXLE CONTROL SYSTEM WIRING DIAGRAM [FN4A-EL] 05–02–2
FOREWORD [FN4A-EL] 05–02–3
AUTOMATIC TRANSAXLE ON-BOARD DIAGNOSTIC FUNCTION [FN4A-EL] 05–02–4
AFTER REPAIR PROCEDURE [FN4A-EL] 05–02–4
DTC TABLE [FN4A-EL] 05–02–8
DTC P0706 [FN4A-EL] 05–02–11
DTC P0707 [FN4A-EL] 05–02–12
DTC P0708 [FN4A-EL] 05–02–15
DTC P0711 [FN4A-EL] 05–02–17
DTC P0712 [FN4A-EL] 05–02–18
DTC P0713 [FN4A-EL] 05–02–21
DTC P0715 [FN4A-EL] 05–02–23
DTC P0720 [FN4A-EL] 05–02–26
DTC P0731 [FN4A-EL] 05–02–29
DTC P0732 [FN4A-EL] 05–02–31
DTC P0733 [FN4A-EL] 05–02–33
DTC P0734 [FN4A-EL] 05–02–35
DTC P0741 [FN4A-EL] 05–02–38
DTC P0742 [FN4A-EL] 05–02–40
DTC P0745 [FN4A-EL] 05–02–42
DTC P0751 [FN4A-EL] 05–02–44
DTC P0752 [FN4A-EL] 05–02–46
DTC P0753 [FN4A-EL] 05–02–48
DTC P0756 [FN4A-EL] 05–02–50
DTC P0757 [FN4A-EL] 05–02–52
DTC P0758 [FN4A-EL] 05–02–54
DTC P0761 [FN4A-EL] 05–02–56
DTC P0762 [FN4A-EL] 05–02–58
DTC P0763 [FN4A-EL] 05–02–60
DTC P0766 [FN4A-EL] 05–02–62
DTC P0767 [FN4A-EL] 05–02–64
DTC P0768 [FN4A-EL] 05–02–66
DTC P0771 [FN4A-EL] 05–02–68
DTC P0772 [FN4A-EL] 05–02–70
DTC P0773 [FN4A-EL] 05–02–72
DTC P0841 [FN4A-EL] 05–02–74
DTC P0894 [FN4A-EL] 05–02–76
PID/DATA MONITOR INSPECTION [FN4A-EL] 05–02–77

AUTOMATIC TRANSAXLE CONTROL SYSTEM WIRING DIAGRAM [FN4A-EL]

DPE050200000W01

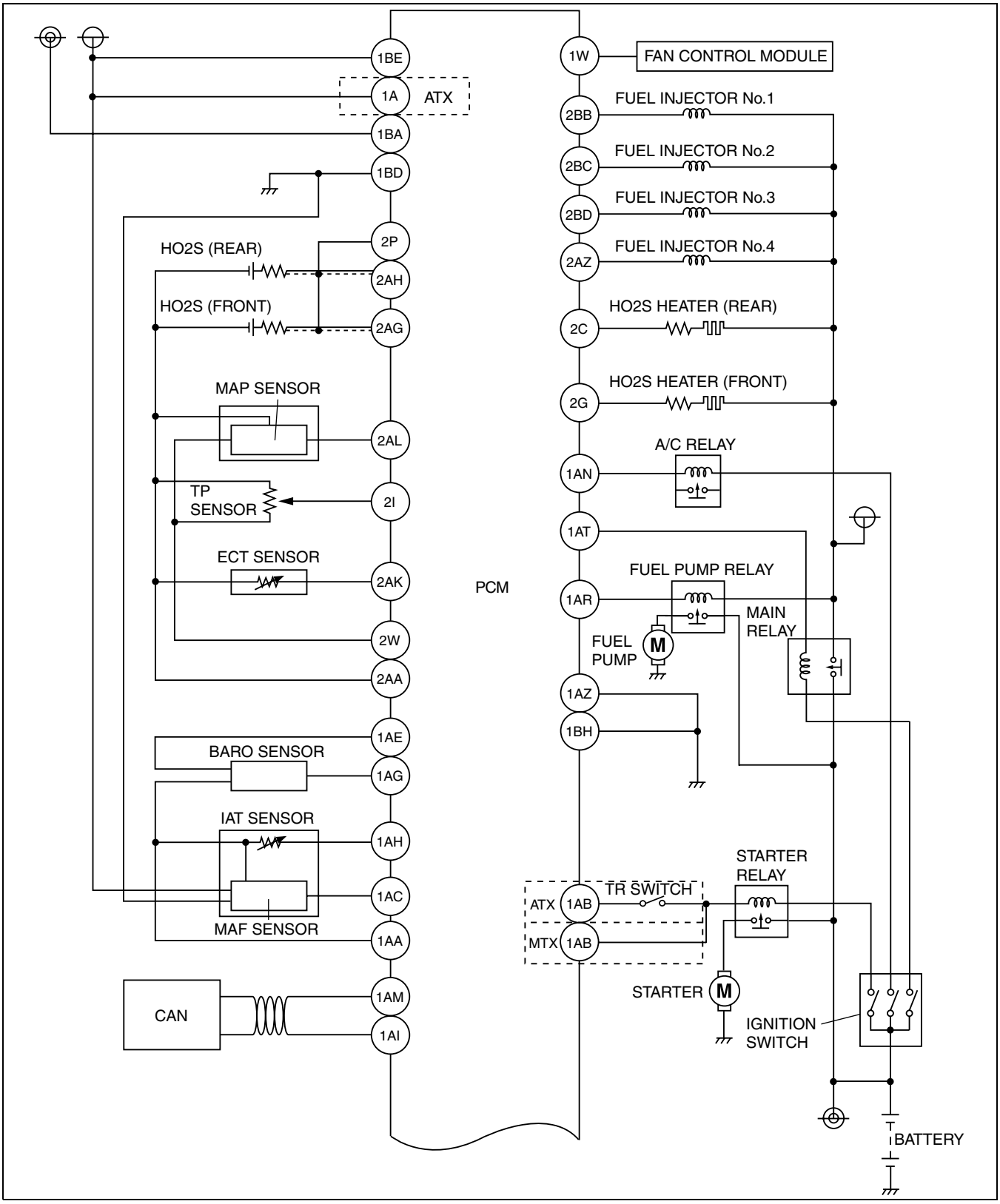

DPE102ZW2002

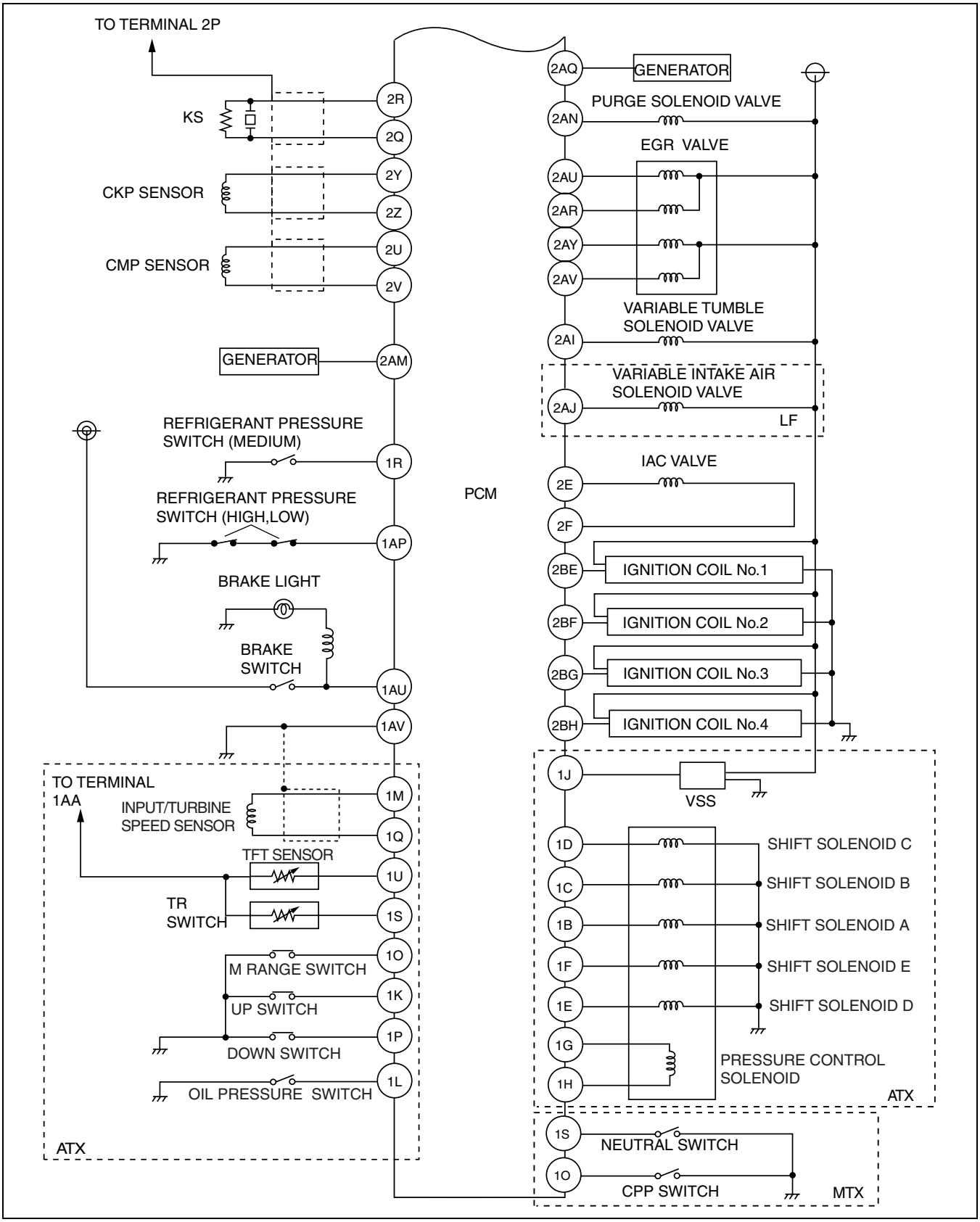

DPE102ZW2003

FOREWORD [FN4A-EL]

DPE050200000W02

- When the customer reports a vehicle malfunction, inspect the malfunction indicator lamp (MIL), AT warning light indication, and PCM memory for diagnostic trouble code (DTC), then diagnose the malfunction according to the following flowchart.
  — If a DTC exists, diagnose the applicable DTC. (See 05–02–8 DTC TABLE [FN4A-EL].)

— If no DTC exists, the MIL does not illuminate, and AT warning light does not illuminate. Diagnose the applicable symptom troubleshooting. (See 05–03–4 SYMPTOM TROUBLESHOOTING ITEM TABLE [FN4A-EL].)

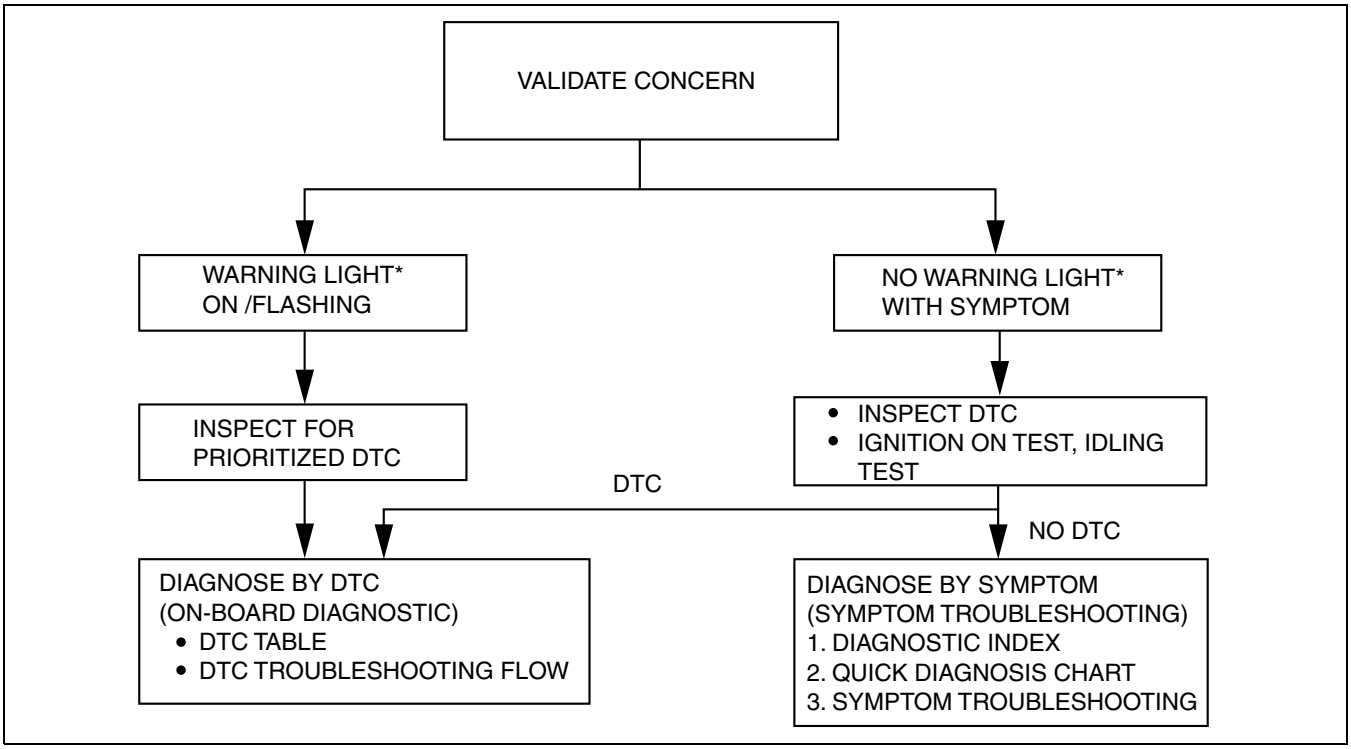

B3E0502W001

*: Malfunction indicator lamp (MIL), AT warning light

AUTOMATIC TRANSAXLE ON-BOARD DIAGNOSTIC FUNCTION [FN4A-EL]

DPE050200000W03

DTC Reading Procedure

(See 01–02A–6 ON-BOARD DIAGNOSTIC TEST [L8, LF].)

AFTER REPAIR PROCEDURE [FN4A-EL]

DPE050200000W04

Caution

- **After repairing a malfunction, perform the following procedure to verify that the malfunction has been corrected.**
- **When performing this procedure, be sure to drive the vehicle at lawful speed and pay attention to the other vehicles.**

1. Connect the WDS or equivalent to the DLC-2.
2. Turn the ignition switch to the ON position (engine off).
3. Verify that DTCs are cleared from memory.
4. Perform the following DTC inspections to ensure that the DTCs have been resolved:

DTC No.	inspection
P0706, P0707, P0708	i. Start the engine. ii. Warm up the engine and ATX. iii. Drive the vehicle in D range at **20 km/h {12.4 mph} or more** for **100 s or more**. iv. Turn the ignition switch to the LOCK position. v. Start the engine. vi. Drive the vehicle in D range at **20 km/h {12.4 mph} or more** for **100 s or more**. vii. Go to Step 5.
P0711	i. Start the engine then wait **180 s or more**. ii. Warm up the engine and ATX. iii. Drive the vehicle in D range, at **within 25—59 km/h {16—36 mph}** for **90 s or more**. iv. Drive the vehicle in D range, at **60 km/h {37 mph}** for **60 s or more**. v. Turn the ignition switch to the LOCK position. vi. Start the engine. vii. Drive the vehicle in D range, at **within 25—59 km/h {16—36 mph}** for **90 s or more**. viii. Drive the vehicle in D range, at **60 km/h {37 mph} or more** for **60 s or more**. ix. Go to Step 5.

DTC No.	inspection
P0712, P0713	i. Start the engine. ii. Warm up the engine and ATX. iii. Drive the vehicle in D range, at **20 km/h {12 mph} or more** for **150 s or more**. iv. Go to Step 5.
P0715	i. Start the engine. ii. Warm up the engine and ATX. iii. Drive the vehicle in D range, at **41 km/h {25 mph} or more** for **0.7 s or more**. iv. Go to Step 5.
P0720	i. Start the engine. ii. Warm up the engine and ATX. iii. Drive the vehicle under the following conditions for **4.5 s or more**. • Turbine speed (TSS PID): **1,500 rpm or more** • Selector lever position: D range, 1GR iv. Turn the ignition switch to the LOCK position. v. Start the engine. vi. Drive the vehicle under the following conditions for **4.5 s or more**. • Turbine speed (TSS PID): **1,500 rpm or more** • Selector lever position: D range, 1GR vii. Go to Step 5.
P0731	i. Start the engine. ii. Warm up the engine and ATX. iii. Drive the vehicle under the following conditions 4 times or more. • Turbine speed (TSS PID): **225—4,987 rpm** • Selector lever position: D range, 1GR • Throttle opening angle (THOP PID): **2.27 % or more** iv. Go to Step 5.
P0732	i. Start the engine. ii. Warm up the engine and ATX. iii. Drive the vehicle under the following conditions 3 times or more. • Turbine speed (TSS PID): **225—4,987 rpm** • Selector lever position: D range, 2GR iv. Go to Step 5.
P0733	i. Start the engine. ii. Warm up the engine and ATX. iii. Drive the vehicle under the following conditions. • Turbine speed (TSS PID): **225—4,987 rpm** • Selector lever position: D range, 3GR iv. Go to Step 5.
P0734	i. Start the engine. ii. Warm up the engine and ATX. iii. Drive the vehicle under the following conditions. • Vehicle speed (VSS PID): **29 km/h {18 mph} or more** • Turbine speed (TSS PID): **225—4,987 rpm** • Selector lever position: D range, 4GR iv. Go to Step 5.
P0741	i. Start the engine. ii. Warm up the engine and ATX. iii. Drive the vehicle under the following conditions for **5 s or more.** • Vehicle speed (VSS PID): **60—100 km/h {38—62 mph}** • Turbine speed (TSS PID): **225—4,987 rpm** • Selector lever position: D range, 4GR iv. Go to Step 5.

DTC No.	inspection
P0742, P0772	i. Start the engine. ii. Warm up the engine and ATX. iii. Drive the vehicle under the following conditions. • Vehicle speed (VSS PID): **70 km/h {43 mph} or less** • Turbine speed (TSS PID): **225—4,987 rpm** • Selector lever position: D range, 4GR • Throttle conditions — Throttle opening angle (TP PID) is **10% or more** and **5 s or more** have passed. — Throttle opening angle (TP PID) is **within 3—10%** and **3 s or more** have passed. — Throttle opening angle is at closed throttle position and **5 s or more** have passed. iv. Turn the ignition switch to the LOCK position. v. Start the engine. vi. Drive the vehicle under the following conditions. • Vehicle speed (VSS PID): **70 km/h {43 mph} or less** • Turbine speed (TSS PID): **225—4,987 rpm** • Selector lever position: D range, 4GR • Throttle conditions — Throttle opening angle (TP PID) is **10% or more** and **5 s or more** have passed. — Throttle opening angle (TP PID) is **within 3—10%** and **3 s or more** have passed. — Throttle opening angle is at closed throttle position and **5 s or more** have passed. vii. Go to Step 5.
P0745	i. Start the engine. ii. Warm up the engine and ATX. iii. Drive the vehicle in D range. iv. Go to Step 5.
P0751	i. Start the engine. ii. Warm up the engine and ATX. iii. Drive the vehicle under the following conditions for **15 s or more**. • Vehicle speed (VSS PID): **29 km/h {18 mph} or more** • Turbine speed (TSS PID): **225—4,987 rpm** • Selector lever position: D range, 4GR iv. Turn the ignition switch to the LOCK position. v. Start the engine. vi. Drive the vehicle under the following conditions for **15 s or more.** • Vehicle speed (VSS PID): **29 km/h {18 mph} or more** • Turbine speed (TSS PID): **225—4,987 rpm** • Selector lever position: D range, 4GR vii. Go to Step 5.
P0752, P0753, P0758, P0763, P0768, P0773, P0841	i. Start the engine. ii. Warm up the engine and ATX. iii. Drive the vehicle in D range and make sure that the gears shift smoothly from 1GR to 4GR and TCC is operated. iv. Turn the ignition switch to the LOCK position. v. Start the engine. vi. Drive the vehicle in D range and make sure that the gears shift smoothly from 1GR to 4GR and TCC is operated. vii. Go to Step 5.
P0756	i. Start the engine. ii. Warm up the engine and ATX. iii. Drive the vehicle under the following conditions 4 times or more. • Turbine speed (TSS PID): **225—4,987 rpm** • Throttle opening angle (THOP PID): **2.27 % or more** • Differential gear case (output) revolution speed (OSS PID): **35 rpm or more** • Selector lever position: D range, 1GR iv. Turn the ignition switch to the LOCK position. v. Start the engine. vi. Drive the vehicle under the following conditions 4 times or more. • Turbine speed (TSS PID): **225—4,987 rpm** • Throttle opening angle (THOP PID): **2.27 % or more** • Differential gear case (output) revolution speed (OSS PID): **35 rpm or more** • Selector lever position: D range, 1GR vii. Go to Step 5.

DTC No.	inspection
P0757, P0766	i. Start the engine. ii. Warm up the engine and ATX. iii. Drive the vehicle under the following conditions. • Vehicle speed (VSS PID): **29 km/h {18 mph} or more** • Turbine speed (TSS PID): **225—4,987 rpm** • Throttle opening angle at closed throttle position • Differential gear case (output) revolution speed (OSS PID): **35 rpm or more** • Selector lever position: D range, 2GR and 4GR iv. Turn the ignition switch to the LOCK position. v. Start the engine. vi. Drive the vehicle under the following conditions. • Vehicle speed (VSS PID): **29 km/h {18 mph} or more** • Turbine speed (TSS PID): **225—4,987 rpm** • Throttle opening angle at closed throttle position • Differential gear case (output) revolution speed (OSS PID): **35 rpm or more** • Selector lever position: D range, 2GR and 4GR vii. Go to Step 5.
P0761	i. Start the engine. ii. Warm up the engine and ATX. iii. Drive the vehicle under the following conditions 4 times or more. • Turbine speed (TSS PID): **225—4,987 rpm** • Throttle opening angle (THOP PID): **2.27 % or more** • Differential gear case (output) revolution speed (OSS PID): **35 rpm or more** • Selector lever position: D range, 1GR and 2GR iv. Turn the ignition switch to the LOCK position. v. Start the engine. vi. Drive the vehicle under the following conditions 4 times or more. • Turbine speed (TSS PID): **225—4,987 rpm** • Throttle opening angle (THOP PID): **2.27 % or more** • Differential gear case (output) revolution speed (OSS PID): **35 rpm or more** • Selector lever position: D range, 1GR and 2GR vii. Go to Step 5.
P0762	i. Start the engine. ii. Warm up the engine and ATX. iii. Drive the vehicle under the following conditions. • Vehicle speed (VSS PID): **18 km/h {11 mph} or more** • Turbine speed (TSS PID): **225—4,987 rpm** • Differential gear case (output) revolution speed (OSS PID): **35 rpm or more** • Selector lever position: D range, 3GR iv. Turn the ignition switch to the LOCK position. v. Start the engine. vi. Drive the vehicle under the following conditions. • Vehicle speed (VSS PID): **18 km/h {11 mph} or more** • Turbine speed (TSS PID): **225—4,987 rpm** • Differential gear case (output) revolution speed (OSS PID): **35 rpm or more** • Selector lever position: D range, 3GR vii. Go to Step 5.
P0767	i. Start the engine. ii. Warm up the engine and ATX. iii. Drive the vehicle under the following conditions for **5 s or more.** • Turbine speed (TSS PID): **225—4,987 rpm** • Selector lever position: D range, 3GR iv. Turn the ignition switch to the LOCK position. v. Start the engine. vi. Drive the vehicle under the following conditions for **5 s or more**. • Turbine speed (TSS PID): **225—4,987 rpm** • Selector lever position: D range, 3GR vii. Go to Step 5.

DTC No.	inspection
P0771	i. Start the engine. ii. Warm up the engine and ATX. iii. Drive the vehicle under the following conditions for **5 s or more**. • Vehicle speed (VSS PID): **60—100 km/h {38—62 mph}** • Turbine speed (TSS PID): **225—4,987 rpm** • Selector lever position: D range, 4GR iv. Turn the ignition switch to the LOCK position. v. Start the engine. vi. Drive the vehicle under the following conditions for **5 s or more**. • Vehicle speed (VSS PID): **60—100 km/h {38—62 mph}** • Turbine speed (TSS PID): **225—4,987 rpm** • Selector lever position: D range, 4GR vii. Go to Step 5.
P0894	i. Start the engine. ii. Warm up the engine and ATX. iii. Depress the brake pedal. iv. Throttle opening angle at closed throttle position. v. Shift the selector lever from the N position to the D range and hold for **3 s or more**. vi. Go to Step 6.

5. Gradually slow down and stop the vehicle.
6. Make sure that the repaired DTC does not recur.

DTC TABLE [FN4A-EL]

DPE050200000W05

DTC No.	Condition	MIL	AT warning light illuminates	DC	Monitor item	Memory function	Page
B1342	SAS control module	(See 08–02–3 DTC TABLE.)					
P0031	Front HO2S heater circuit low input	(See 01–02A–9 DTC TABLE [L8, LF].)					
P0032	Front HO2S heater circuit high input	(See 01–02A–9 DTC TABLE [L8, LF].)					
P0037	Rear HO2S heater circuit low input	(See 01–02A–9 DTC TABLE [L8, LF].)					
P0038	Rear HO2S heater circuit high input	(See 01–02A–9 DTC TABLE [L8, LF].)					
P0101	MAF sensor circuit range/performance problem	(See 01–02A–9 DTC TABLE [L8, LF].)					
P0102	MAF sensor circuit low input	(See 01–02A–9 DTC TABLE [L8, LF].)					
P0103	MAF sensor circuit high input	(See 01–02A–9 DTC TABLE [L8, LF].)					
P0107	MAP sensor circuit low input	(See 01–02A–9 DTC TABLE [L8, LF].)					
P0108	MAP sensor circuit high input	(See 01–02A–9 DTC TABLE [L8, LF].)					
P0111	IAT sensor circuit range/performance problem	(See 01–02A–9 DTC TABLE [L8, LF].)					
P0112	IAT sensor circuit low input	(See 01–02A–9 DTC TABLE [L8, LF].)					
P0113	IAT sensor circuit high input	(See 01–02A–9 DTC TABLE [L8, LF].)					
P0117	ECT sensor circuit low input	(See 01–02A–9 DTC TABLE [L8, LF].)					
P0118	ECT sensor circuit high input	(See 01–02A–9 DTC TABLE [L8, LF].)					
P0121	TP sensor stuck closed	(See 01–02A–9 DTC TABLE [L8, LF].)					
P0122	TP sensor circuit low input	(See 01–02A–9 DTC TABLE [L8, LF].)					
P0123	TP sensor circuit high input	(See 01–02A–9 DTC TABLE [L8, LF].)					
P0125	Excessive time to enter closed loop fuel control	(See 01–02A–9 DTC TABLE [L8, LF].)					
P0132	Front HO2S circuit high input	(See 01–02A–9 DTC TABLE [L8, LF].)					
P0133	Front HO2S circuit problem	(See 01–02A–9 DTC TABLE [L8, LF].)					
P0134	Front HO2S no activity detected	(See 01–02A–9 DTC TABLE [L8, LF].)					
P0138	Rear HO2S circuit high input	(See 01–02A–9 DTC TABLE [L8, LF].)					
P0140	Rear HO2S no activity detected	(See 01–02A–9 DTC TABLE [L8, LF].)					
P0300	Random misfire detected	(See 01–02A–9 DTC TABLE [L8, LF].)					
P0301	Cylinder No.1 misfire detected	(See 01–02A–9 DTC TABLE [L8, LF].)					
P0302	Cylinder No.2 misfire detected	(See 01–02A–9 DTC TABLE [L8, LF].)					
P0303	Cylinder No.3 misfire detected	(See 01–02A–9 DTC TABLE [L8, LF].)					
P0304	Cylinder No.4 misfire detected	(See 01–02A–9 DTC TABLE [L8, LF].)					
P0327	KS circuit low input	(See 01–02A–9 DTC TABLE [L8, LF].)					
P0328	KS circuit high input	(See 01–02A–9 DTC TABLE [L8, LF].)					
P0335	CKP sensor circuit problem	(See 01–02A–9 DTC TABLE [L8, LF].)					

DTC No.	Condition	MIL	AT warning light illuminates	DC	Monitor item	Memory function	Page
P0340	CMP sensor circuit problem	(See 01–02A–9 DTC TABLE [L8, LF].)					
P0403	EGR valve (stepper motor) circuit problem	(See 01–02A–9 DTC TABLE [L8, LF].)					
P0420	Catalyst system efficiency below threshold	(See 01–02A–9 DTC TABLE [L8, LF].)					
P0421	Warm up three way catalyst system efficiency below threshold	(See 01–02A–9 DTC TABLE [L8, LF].)					
P0443	Purge solenoid valve circuit problem	(See 01–02A–9 DTC TABLE [L8, LF].)					
P0480	Cooling fan control circuit problem	(See 01–02A–9 DTC TABLE [L8, LF].)					
P0500	VSS circuit problem	(See 01–02A–9 DTC TABLE [L8, LF].)					
P0505	IAC system problem	(See 01–02A–9 DTC TABLE [L8, LF].)					
P0506	Idle control system RPM lower than expected	(See 01–02A–9 DTC TABLE [L8, LF].)					
P0507	Idle control system RPM higher than expected	(See 01–02A–9 DTC TABLE [L8, LF].)					
P0511	IAC valve circuit problem	(See 01–02A–9 DTC TABLE [L8, LF].)					
P0602	PCM programming error	(See 01–02A–9 DTC TABLE [L8, LF].)					
P0610	PCM vehicle options error	(See 01–02A–9 DTC TABLE [L8, LF].)					
P0661	Variable intake air solenoid valve circuit low input	(See 01–02A–9 DTC TABLE [L8, LF].)					
P0662	Variable intake air solenoid valve circuit high input	(See 01–02A–9 DTC TABLE [L8, LF].)					
P0703	Brake switch input circuit problem	(See 01–02A–9 DTC TABLE [L8, LF].)					
P0704	CPP switch input circuit problem	(See 01–02A–9 DTC TABLE [L8, LF].)					
P0706	Transaxle range (TR) switch circuit range/ performance	ON	YES	2	CCM	X	(See 05–02–11 DTC P0706 [FN4A-EL].)
P0707	Transaxle range (TR) switch circuit low input	ON	YES	1	CCM	X	(See 05–02–12 DTC P0707 [FN4A-EL].)
P0708	Transaxle range (TR) switch circuit high input	ON	YES	2	CCM	X	(See 05–02–15 DTC P0708 [FN4A-EL].)
P0711	Transaxle fluid temperature (TFT) sensor circuit range/performance (stuck)	ON	NO	2	CCM	X	(See 05–02–17 DTC P0711 [FN4A-EL].)
P0712	Transaxle fluid temperature (TFT) sensor circuit malfunction (short to ground)	ON	YES	1	CCM	X	(See 05–02–18 DTC P0712 [FN4A-EL].)
P0713	Transaxle fluid temperature (TFT) sensor circuit malfunction (open circuit)	ON	YES	1	CCM	X	(See 05–02–21 DTC P0713 [FN4A-EL].)
P0715	Input/turbine speed sensor circuit malfunction	ON	YES	1	CCM	X	(See 05–02–23 DTC P0715 [FN4A-EL].)
P0720	Vehicle speed sensor (VSS) circuit malfunction (ATX)	ON	YES	2	CCM	X	(See 05–02–26 DTC P0720 [FN4A-EL].)
P0731	Gear 1 incorrect (incorrect gear ratio detected)	OFF	YES	1	CCM	X	(See 05–02–29 DTC P0731 [FN4A-EL].)
P0732	Gear 2 incorrect (incorrect gear ratio detected)	OFF	YES	1	CCM	X	(See 05–02–31 DTC P0732 [FN4A-EL].)
P0733	Gear 3 incorrect (incorrect gear ratio detected)	OFF	YES	1	CCM	X	(See 05–02–33 DTC P0733 [FN4A-EL].)
P0734	Gear 4 incorrect (incorrect gear ratio detected)	OFF	YES	1	CCM	X	(See 05–02–35 DTC P0734 [FN4A-EL].)
P0741	Torque converter clutch (TCC) (stuck off)	OFF	YES	1	CCM	X	(See 05–02–38 DTC P0741 [FN4A-EL].)

DTC No.	Condition	MIL	AT warning light illuminates	DC	Monitor item	Memory function	Page
P0742	Torque converter clutch (TCC) (stuck on)	OFF	YES	1	CCM	X	(See 05–02–40 DTC P0742 [FN4A-EL].)
P0745	Pressure control solenoid malfunction	OFF	YES	1	CCM	X	(See 05–02–42 DTC P0745 [FN4A-EL].)
P0751	Shift solenoid A stuck off	ON	YES	2	CCM	X	(See 05–02–44 DTC P0751 [FN4A-EL].)
P0752	Shift solenoid A stuck on	ON	YES	2	CCM	X	(See 05–02–46 DTC P0752 [FN4A-EL].)
P0753	Shift solenoid A malfunction (electrical)	ON	YES	1	CCM	X	(See 05–02–48 DTC P0753 [FN4A-EL].)
P0756	Shift solenoid B stuck off	ON	YES	2	CCM	X	(See 05–02–50 DTC P0756 [FN4A-EL].)
P0757	Shift solenoid B stuck on	ON	YES	2	CCM	X	(See 05–02–52 DTC P0757 [FN4A-EL].)
P0758	Shift solenoid B malfunction (electrical)	ON	YES	1	CCM	X	(See 05–02–54 DTC P0758 [FN4A-EL].)
P0761	Shift solenoid C stuck off	ON	YES	2	CCM	X	(See 05–02–56 DTC P0761 [FN4A-EL].)
P0762	Shift solenoid C stuck on	ON	YES	2	CCM	X	(See 05–02–58 DTC P0762 [FN4A-EL].)
P0763	Shift solenoid C malfunction (electrical)	ON	YES	1	CCM	X	(See 05–02–60 DTC P0763 [FN4A-EL].)
P0766	Shift solenoid D stuck off	ON	YES	2	CCM	X	(See 05–02–62 DTC P0766 [FN4A-EL].)
P0767	Shift solenoid D stuck on	OFF	YES	2	CCM	X	(See 05–02–64 DTC P0767 [FN4A-EL].)
P0768	Shift solenoid D malfunction (electrical)	ON	YES	1	CCM	X	(See 05–02–66 DTC P0768 [FN4A-EL].)
P0771	Shift solenoid E stuck off	ON	YES	2	CCM	X	(See 05–02–68 DTC P0771 [FN4A-EL].)
P0772	Shift solenoid E stuck on	ON	YES	2	CCM	X	(See 05–02–70 DTC P0772 [FN4A-EL].)
P0773	Shift solenoid E malfunction (electrical)	ON	YES	1	CCM	X	(See 05–02–72 DTC P0773 [FN4A-EL].)
P0841	Oil pressure switch circuit malfunction	OFF	NO	2	CCM	X	(See 05–02–74 DTC P0841 [FN4A-EL].)
P0850	Neutral switch input circuit problem	(See 01–02A–9 DTC TABLE [L8, LF].)					
P0894	Forward clutch torque transmission	OFF	Yes	1	CCM	X	(See 05–02–76 DTC P0894 [FN4A-EL].)
P1260	Immobilizer system problem	(See 01–02A–9 DTC TABLE [L8, LF].)					
P2006	Variable tumble shutter valve stuck closed	(See 01–02A–9 DTC TABLE [L8, LF].)					
P2009	Variable tumble solenoid valve circuit low input	(See 01–02A–9 DTC TABLE [L8, LF].)					
P2010	Variable tumble solenoid valve circuit high input	(See 01–02A–9 DTC TABLE [L8, LF].)					

DTC No.	Condition	MIL	AT warning light illuminates	DC	Monitor item	Memory function	Page
P2096	Target A/F feedback system too lean	(See 01–02A–9 DTC TABLE [L8, LF].)					
P2097	Target A/F feedback system too rich	(See 01–02A–9 DTC TABLE [L8, LF].)					
P2177	Fuel system too lean at off idle	(See 01–02A–9 DTC TABLE [L8, LF].)					
P2178	Fuel system too rich at off idle	(See 01–02A–9 DTC TABLE [L8, LF].)					
P2187	Fuel system too lean at idle	(See 01–02A–9 DTC TABLE [L8, LF].)					
P2188	Fuel system too rich at idle	(See 01–02A–9 DTC TABLE [L8, LF].)					
P2195	Front HO2S signal stuck lean	(See 01–02A–9 DTC TABLE [L8, LF].)					
P2196	Front HO2S signal stuck rich	(See 01–02A–9 DTC TABLE [L8, LF].)					
P2228	BARO sensor circuit low input	(See 01–02A–9 DTC TABLE [L8, LF].)					
P2229	BARO sensor circuit high input	(See 01–02A–9 DTC TABLE [L8, LF].)					
P2502	Charging system voltage problem	(See 01–02A–9 DTC TABLE [L8, LF].)					
P2503	Charging system voltage low	(See 01–02A–9 DTC TABLE [L8, LF].)					
P2504	Charging system voltage high	(See 01–02A–9 DTC TABLE [L8, LF].)					
P2507	PCM B+ voltage low	(See 01–02A–9 DTC TABLE [L8, LF].)					
U0073	CAN system communication error	(See 09–02–5 DTC TABLE [MULTIPLEX COMMUNICATION SYSTEM])					
U0121	Communication error to ABS HU/CM	(See 09–02–5 DTC TABLE [MULTIPLEX COMMUNICATION SYSTEM])					
U0155	Communication error to instrument cluster	(See 09–02–5 DTC TABLE [MULTIPLEX COMMUNICATION SYSTEM])					

DTC P0706 [FN4A-EL]

DPE050200000W07

DTC P0706	Transaxle range (TR) switch range/performance
DETECTION CONDITION	• When all conditions below are satisfied and **100 s or more** have passed. — Engine speed **530 rpm or more** — Vehicle speed **20 km/h {12 mph} or more** — Voltage at PCM terminal 1S **0.5 V or more** — P, R, N, or D range/position not detected **Diagnostic support note:** • This is a continuous monitor (CCM). • The MIL illuminates if the PCM detects the above malfunction condition in two consecutive drive cycles or in one drive cycle while the DTC for the same malfunction has been stored in the PCM. • The PENDING CODE is available if the PCM detects the above malfunction condition during the first drive cycle. • FREEZE FRAME DATA is available. • The AT warning light illuminates. • The DTC is stored in the PCM memory.
POSSIBLE CAUSE	• TR switch malfunction • TR switch misadjustment • PCM malfunction

Diagnostic procedure

STEP	INSPECTION		ACTION
1	**VERIFY FREEZE FRAME DATA HAS BEEN RECORDED** • Has the FREEZE FRAME DATA been recorded?	Yes	Go to the next step.
		No	Record the FREEZE FRAME DATA on the repair order, then go to the next step.
2	**VERIFY RELATED REPAIR INFORMATION AVAILABILITY** • Verify related Service Bulletins and/or on-line repair information availability. • Is any related repair information available?	Yes	Perform repair or diagnosis according to the available repair information. • If the vehicle is not repaired, go to the next step.
		No	Go to the next step.
3	**INSPECT TR SWITCH** • Turn the ignition switch to the LOCK position. • Disconnect the TR switch connector. • Inspect for resistance between TR switch terminals B and C (part-side). • Is the resistance normal? (See 05–17–9 TRANSAXLE RANGE (TR) SWITCH INSPECTION [FN4A-EL].)	Yes	Adjust the TR switch, then go to the next step. (See 05–17–14 TRANSAXLE RANGE (TR) SWITCH ADJUSTMENT [FN4A-EL].)
		No	Replace the TR switch, then go to the next step. (See 05–17–11 TRANSAXLE RANGE (TR) SWITCH REMOVAL/INSTALLATION [FN4A-EL].)
4	**VERIFY TROUBLESHOOTING OF DTC P0706 COMPLETED** • Make sure to reconnect all the disconnected connectors. • Clear the DTC from the memory using the WDS or equivalent. • Drive the vehicle in each range (D and R) for **100 s or more** under the following conditions: — Engine speed (RPM PID): **530 rpm or more** — Vehicle speed (VSS PID): **20 km/h {12 mph} or more** • Is the PENDING CODE present?	Yes	Replace the PCM, then go to the next step. (See 01–40A–5 PCM REMOVAL/INSTALLATION [L8, LF].)
		No	No concern is detected. Go to the next step.
5	**VERIFY AFTER REPAIR PROCEDURE** • Perform the “After Repair Procedure”. (See 05–02–4 AFTER REPAIR PROCEDURE [FN4A-EL].) • Are any DTCs present?	Yes	Go to the applicable DTC inspection.
		No	DTC troubleshooting completed.

DTC P0707 [FN4A-EL]

DPE050200000W08

DTC P0707	Transaxle range (TR) switch circuit low input
DETECTION CONDITION	• When all conditions below are satisfied and **100 s or more** have passed. — Vehicle speed **20 km/h {12 mph} or more** — Engine speed **530 rpm or more** — Voltage at PCM terminal 1S **0.5 V or less** **Diagnostic support note:** • This is a continuous monitor (CCM). • The MIL illuminates if the PCM detects the above malfunction condition during the first drive cycle. • A PENDING CODE is not available. • FREEZE FRAME DATA is available. • The AT warning light illuminates. • The DTC is stored in the PCM memory.
POSSIBLE CAUSE	• TR switch malfunction • Short to ground in wiring harness between TR switch terminal C and PCM terminal 1S • TR switch signal and TR switch ground circuits shorted each other • PCM malfunction

DTC P0707	Transaxle range (TR) switch circuit low input

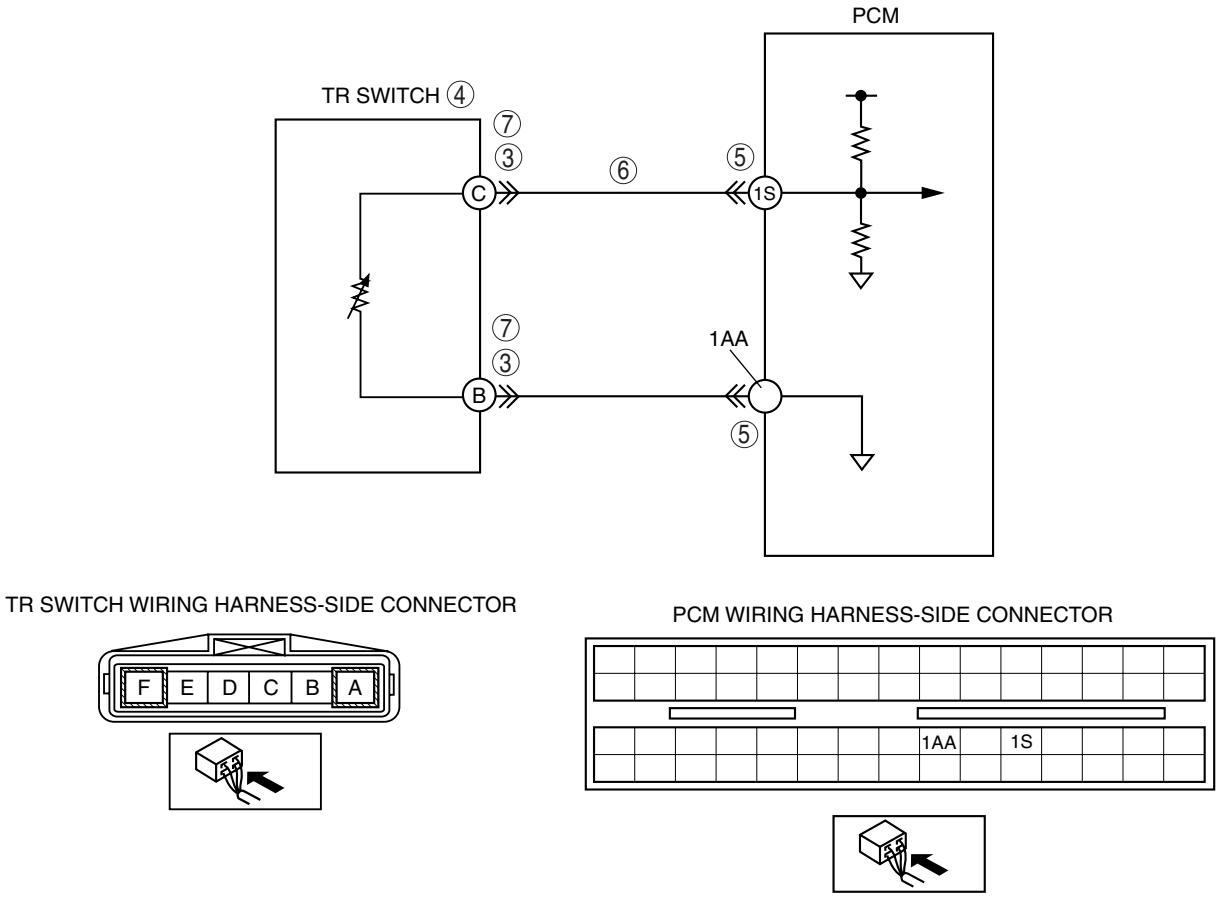

Diagnostic procedure

STEP	INSPECTION		ACTION
1	**VERIFY FREEZE FRAME DATA HAS BEEN RECORDED** • Has the FREEZE FRAME DATA been recorded?	Yes	Go to the next step.
		No	Record the FREEZE FRAME DATA on the repair order, then go to the next step.
2	**VERIFY RELATED REPAIR INFORMATION AVAILABILITY** • Verify related Service Bulletins and/or on-line repair information availability. • Is any related repair information available?	Yes	Perform repair or diagnosis according to the available repair information. • If the vehicle is not repaired, go to the next step.
		No	Go to the next step.
3	**INSPECT TR SWITCH CONNECTOR** • Turn the ignition switch to the LOCK position. • Disconnect the TR switch connector. • Inspect for poor connection at TR switch terminals B and C (part-side) (such as damaged/pulled-out pins, corrosion) • Are TR switch terminals normal?	Yes	Go to the next step.
		No	Repair terminals or replace the TR switch, then go to Step 8. (See 05–17–11 TRANSAXLE RANGE (TR) SWITCH REMOVAL/INSTALLATION [FN4A-EL].)
4	**INSPECT TR SWITCH** • Turn the ignition switch to the LOCK position. • Disconnect the TR switch connector. • Inspect for resistance between TR switch terminals B and C (part-side). • Is the resistance normal? (See 05–17–9 TRANSAXLE RANGE (TR) SWITCH INSPECTION [FN4A-EL].)	Yes	Go to the next step.
		No	Replace the TR switch, then go to Step 8. (See 05–17–11 TRANSAXLE RANGE (TR) SWITCH REMOVAL/INSTALLATION [FN4A-EL].)
5	**INSPECT PCM CONNECTOR FOR POOR CONNECTION** • Disconnect the PCM connector. • Inspect for poor connection at terminals 1S and 1AA (such as damaged/pulled-out pins, corrosion). • Is there any malfunction?	Yes	Repair or replace the terminal, then go to Step 8.
		No	Go to the next step.
6	**INSPECT TR SWITCH SIGNAL CIRCUIT FOR SHORT TO GROUND** • Inspect for continuity between TR switch terminal C (wiring harness-side) and body ground. • Is there continuity?	Yes	Repair or replace the wiring harness for short to ground, then go to Step 8.
		No	Go to the next step.
7	**INSPECT TR SWITCH CIRCUIT FOR SHORT CIRCUIT** • Inspect for continuity between TR switch terminals B and C (wiring harness-side). • Is there continuity?	Yes	Repair or replace the wiring harness for short circuit, then go to the next step.
		No	Go to the next step.
8	**VERIFY TROUBLESHOOTING OF DTC P0707 COMPLETED** • Make sure to reconnect all the disconnected connectors. • Clear the DTC from the memory using the WDS or equivalent. • Drive the vehicle for **100 s or more** under the following conditions: — Engine speed (RPM PID): **530 rpm or more** — Vehicle speed (VSS PID): **20 km/h {12 mph} or more** • Is the PENDING CODE present?	Yes	Replace the PCM, then go to the next step. (See 01–40A–5 PCM REMOVAL/INSTALLATION [L8, LF].)
		No	No concern is detected. Go to the next step.
9	**VERIFY AFTER REPAIR PROCEDURE** • Perform the “After Repair Procedure”. (See 05–02–4 AFTER REPAIR PROCEDURE [FN4A-EL].) • Are any DTCs present?	Yes	Go to the applicable DTC inspection.
		No	DTC troubleshooting completed.

DTC P0708 [FN4A-EL]

DPE050200000W09

DTC P0708	Transaxle range (TR) switch circuit high input
DETECTION CONDITION	• When all conditions below are satisfied and **100 s or more** have passed. — Vehicle speed **20 km/h {12 mph} or more** — Engine speed **530 rpm or more** — Voltage at PCM terminal 1S **4.79 V or more** **Diagnostic support note:** • This is a continuous monitor (CCM). • The MIL illuminates if the PCM detects the above malfunction condition in two consecutive drive cycles or in one drive cycle while the DTC for the same malfunction has been stored in the PCM. • A PENDING CODE is not available. • FREEZE FRAME DATA is available. • The AT warning light illuminates. • The DTC is stored in the PCM memory.
POSSIBLE CAUSE	• TR switch malfunction • Open circuit in wiring harness between TR switch terminal C and PCM terminal 1S • Short to power supply in wiring harness between TR switch terminal C and PCM terminal 1S • Open circuit in wiring harness between TR switch terminal B and PCM terminal 1AA • Poor connection of TR switch or PCM connectors • PCM malfunction

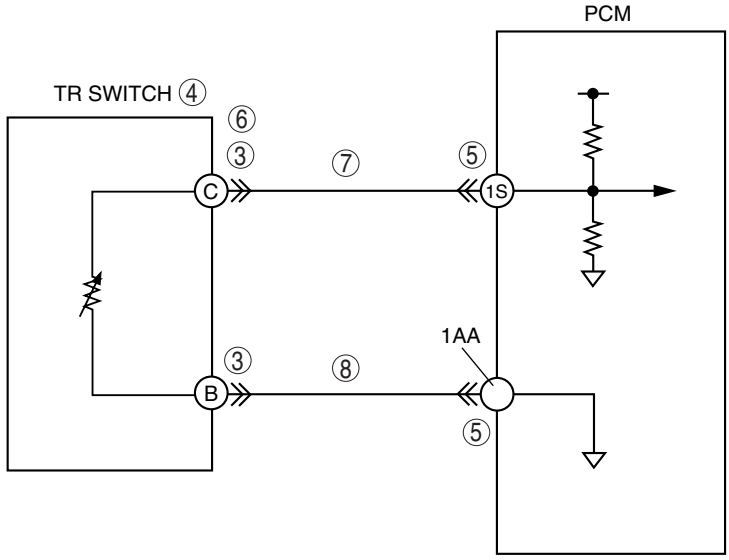

TR SWITCH WIRING HARNESS-SIDE CONNECTOR

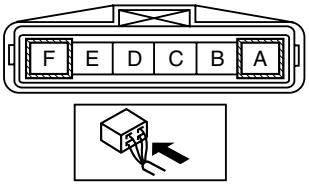

PCM WIRING HARNESS-SIDE CONNECTOR

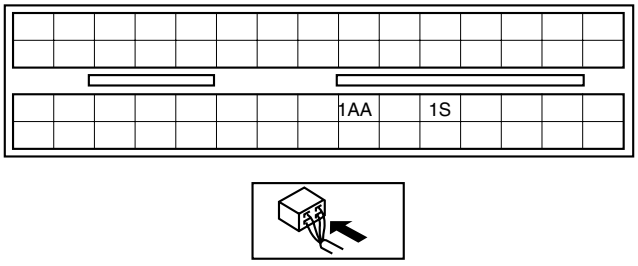

05

Diagnostic procedure

STEP	INSPECTION		ACTION
1	**VERIFY FREEZE FRAME DATA HAS BEEN RECORDED** • Has the FREEZE FRAME DATA been recorded?	Yes	Go to the next step.
		No	Record the FREEZE FRAME DATA on the repair order, then go to the next step.
2	**VERIFY RELATED REPAIR INFORMATION AVAILABILITY** • Verify related Service Bulletins and/or on-line repair information availability. • Is any related repair information available?	Yes	Perform repair or diagnosis according to the available repair information. • If the vehicle is not repaired, go to the next step.
		No	Go to the next step.
3	**INSPECT TR SWITCH CONNECTOR FOR POOR CONNECTION** • Turn the ignition switch to the LOCK position. • Disconnect the TR switch connector. • Inspect for poor connection (such as damaged/pulled-out pins, corrosion). • Are TR switch terminals normal?	Yes	Go to the next step.
		No	Repair terminals or replace the TR switch, then go to Step 9. (See 05–17–11 TRANSAXLE RANGE (TR) SWITCH REMOVAL/INSTALLATION [FN4A-EL].)
4	**INSPECT TR SWITCH** • Inspect for resistance between TR switch terminals B and C (part-side). • Is the resistance normal? (See 05–17–9 TRANSAXLE RANGE (TR) SWITCH INSPECTION [FN4A-EL].)	Yes	Go to the next step.
		No	Replace the TR switch, then go to Step 9. (See 05–17–11 TRANSAXLE RANGE (TR) SWITCH REMOVAL/INSTALLATION [FN4A-EL].)
5	**INSPECT PCM CONNECTOR FOR POOR CONNECTION** • Disconnect the PCM connector. • Inspect for poor connection at terminals 1S and 1AA (such as damaged/pulled-out pins, corrosion). • Is there any malfunction?	Yes	Repair or replace the terminal, then go to step 9.
		No	Go to the next step.
6	**INSPECT TR SWITCH SIGNAL CIRCUIT FOR SHORT TO POWER SUPPLY** • Turn the ignition switch to the ON position (engine off). • Inspect the voltage between TR switch terminal C and (wiring harness-side) body ground. • Is the voltage **B+**?	Yes	Repair or replace the wiring harness for short to power supply, then go to Step 9.
		No	Go to the next step.
7	**INSPECT TR SWITCH SIGNAL CIRCUIT FOR OPEN CIRCUIT** • Inspect for continuity between TR switch terminal C (wiring harness-side) and PCM terminal 1S. • Is there continuity?	Yes	Go to the next step.
		No	Repair or replace the wiring harness for open circuit, then go to step 9.
8	**INSPECT TR SWITCH GROUND CIRCUIT FOR OPEN CIRCUIT** • Inspect for continuity between TR switch terminal B (wiring harness-side) and PCM terminal 1AA. • Is there continuity?	Yes	Go to the next step.
		No	Repair or replace the wiring harness for open circuit, then go to the next step.
9	**VERIFY TROUBLESHOOTING OF DTC P0708 COMPLETED** • Make sure to reconnect all the disconnected connectors. • Clear the DTC from the memory using the WDS or equivalent. • Drive the vehicle for **100 s or more** under the following conditions: — Engine speed (RPM PID) **530 rpm or more** — Vehicle speed (VSS PID) **20 km/h {12 mph} or more** • Is the PENDING CODE present?	Yes	Replace the PCM, then go to the next step. (See 01–40A–5 PCM REMOVAL/INSTALLATION [L8, LF].)
		No	No concern is detected. Go to the next step.
10	**VERIFY AFTER REPAIR PROCEDURE** • Perform the “After Repair Procedure”. (See 05–02–4 AFTER REPAIR PROCEDURE [FN4A-EL].) • Are any DTCs present?	Yes	Go to the applicable DTC inspection.
		No	DTC troubleshooting completed.

DTC P0711 [FN4A-EL]

DPE050200000W10

DTC P0711	Transaxle fluid temperature (TFT) sensor circuit range/performance (stuck)
DETECTION CONDITION	• When all conditions below are satisfied. — When **180 s** have passed after the engine is started, vehicle is driven for **90 s or more** at vehicle speed **between 25—59 km/h {15—36 mph}**, then **60 km/h {37 mph} or more** for **60 s or more**. — P0712, P0713 not output — Variation in ATF voltage **0.03 V or less** **Diagnostic support note:** • This is a continuous monitor (CCM). • The MIL illuminates if the PCM detects the above malfunction condition in two consecutive drive cycles or in one drive cycle while the DTC for the same malfunction has been stored in the PCM. • The PENDING CODE is available if the PCM detects the above malfunction condition during the first drive cycle. • FREEZE FRAME DATA is available. • AT warning light does not illuminates. • The DTC is stored in the PCM memory.
POSSIBLE CAUSE	• TFT sensor malfunction • Connector corrosion • PCM malfunction

Diagnostic procedure

STEP	INSPECTION		ACTION
1	**VERIFY FREEZE FRAME DATA HAS BEEN RECORDED** • Has the FREEZE FRAME DATA been recorded?	Yes	Go to the next step.
		No	Record the FREEZE FRAME DATA on the repair order, then go to the next step.
2	**VERIFY RELATED REPAIR INFORMATION AVAILABILITY** • Verify related Service Bulletins and/or on-line repair information availability. • Is any related repair information available?	Yes	Perform repair or diagnosis according to the available repair information. • If the vehicle is not repaired, go to the next step.
		No	Go to the next step.
3	**INSPECT TFT SENSOR VOLTAGE** • Turn the ignition switch to the ON position (engine off). • Measure the voltage at PCM terminal 1U. • Record terminal 1U voltage. • Start the engine. • Drive the vehicle at **60 km/h {37 mph} or more** for **330 s or more**. • Record terminal 1U voltage again. • Is the variation in voltage **0.03 V or more**?	Yes	Go to Step 5.
		No	Go to the next step.
4	**INSPECT TERMINAL CONDITION** • Turn the ignition switch to the LOCK position. • Disconnect the ATX connector. • Inspect terminals for corrosion. • Are terminals normal?	Yes	Go to the next step.
		No	Repair or replace the terminals, then go to the next step.
5	**VERIFY TROUBLESHOOTING OF DTC P0711 COMPLETED** • Make sure to reconnect all the disconnected connectors. • Clear the DTC from the memory using the WDS or equivalent. • Decrease ATF temperature to **20 °C {68 °F} or less**. • Start the engine and wait for **180 s or more**. • Drive the vehicle at a vehicle speed **between 25—59 km/h {15—36 mph}** for **90 s or more**. • Drive the vehicle at a vehicle speed **60 km/h {37 mph} or more** for **60 s or more**. • Is the PENDING CODE present?	Yes	Replace the PCM, then go to the next step. (See 01–40A–5 PCM REMOVAL/INSTALLATION [L8, LF].)
		No	Go to the next step.
6	**VERIFY AFTER REPAIR PROCEDURE** • Perform the “After Repair Procedure”. (See 05–02–4 AFTER REPAIR PROCEDURE [FN4A-EL].) • Are any DTCs present?	Yes	Go to the applicable DTC inspection.
		No	DTC troubleshooting completed.

DTC P0712 [FN4A-EL]

DPE050200000W11

DTC P0712	Transaxle fluid temperature (TFT) sensor circuit malfunction (short to ground)
DETECTION CONDITION	• If the PCM detects either of the following conditions for **150 s or more**, the PCM determines that the TFT sensor circuit has a malfunction. — TFT sensor voltage **0.06 V or less** and vehicle speed **20 km/h {12 mph} or more** **Diagnostic support note:** • This is a continuous monitor (CCM). • The MIL illuminates if the PCM detects the above malfunction conditions during the first drive cycle. • A PENDING CODE is not available. • FREEZE FRAME DATA is available. • The AT warning light illuminates. • The DTC is stored in the PCM memory.
POSSIBLE CAUSE	• TFT sensor malfunction • Short to ground in wiring harness between TFT sensor and ATX terminal E • Short to ground in wiring harness between TFT sensor and ATX terminal H • Short to ground in wiring harness between ATX terminal E and PCM terminal 1U • Damaged connectors between TFT sensor and PCM • PCM malfunction

DTC P0712	Transaxle fluid temperature (TFT) sensor circuit malfunction (short to ground)

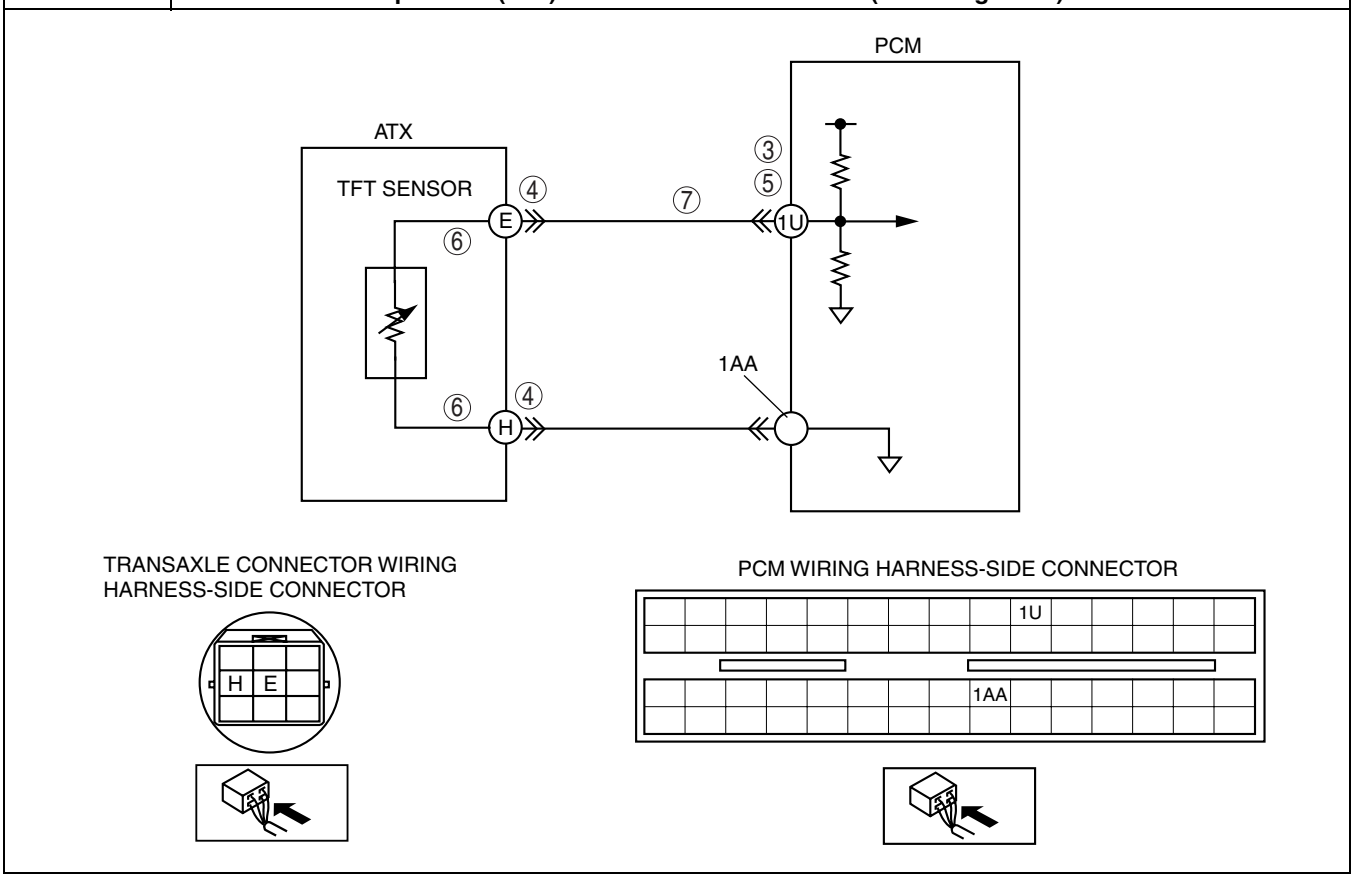

Diagnostic procedure

STEP	INSPECTION		ACTION
1	**VERIFY FREEZE FRAME DATA HAS BEEN RECORDED** • Has the FREEZE FRAME DATA been recorded?	Yes	Go to the next step.
		No	Record the FREEZE FRAME DATA on the repair order, then go to the next step.
2	**VERIFY RELATED REPAIR INFORMATION AVAILABILITY** • Verify related Service Bulletins and/or on-line repair information availability. • Is any related repair information available?	Yes	Perform repair or diagnosis according to the available repair information. • If the vehicle is not repaired, go to the next step.
		No	Go to the next step.
3	**VERIFY CURRENT INPUT SIGNAL STATUS** • Turn the ignition switch to the ON position (engine off). • Inspect the voltage at PCM terminal 1U. • Is the voltage **0.06 V or more**?	Yes	Go to the intermittent concern troubleshooting procedure. (See 01–03A–55 INTERMITTENT CONCERN TROUBLESHOOTING [L8, LF].)
		No	Go to the next step.
4	**INSPECT TERMINAL CONDITION** • Turn the ignition switch to the LOCK position. • Disconnect the ATX connector. • Inspect for poor connection (such as damaged/ pulled-out pins, corrosion). • Are the terminals bent?	Yes	Repair or replace the terminals, then go to Step 8. • If the terminals cannot be repaired, replace the wiring harness, then go to Step 8.
		No	Go to the next step.
5	**INSPECT TFT SENSOR CIRCUIT** • Turn the ignition switch to the ON position (engine off). • Verify that the voltage changes to **4.67 V or more** at PCM terminal 1U when ATX connector is disconnected. • Does the voltage change?	Yes	Go to the next step.
		No	Go to Step 8.
6	**INSPECT TFT SENSOR CIRCUIT FOR SHORT TO GROUND** • Inspect for continuity between ATX terminals (transaxle case side) and body ground. — E and body ground — H and body ground • Is there continuity?	Yes	Repair or replace the wiring harness, then go to Step 8.
		No	Replace the TFT sensor, then go to Step 8. (See 05–17–18 TRANSAXLE FLUID TEMPERATURE (TFT) SENSOR REMOVAL/INSTALLATION [FN4A-EL].)
7	**INSPECT ATX CONNECTOR CIRCUIT FOR SHORT TO GROUND** • Turn the ignition switch to the LOCK position. • Inspect for continuity between ATX terminal E (wiring harness-side) and body ground. • Is there continuity?	Yes	Repair or replace the wiring harness, then go to the next step.
		No	Go to the next step.
8	**VERIFY TROUBLESHOOTING OF DTC P0712 COMPLETED** • Make sure to reconnect all the disconnected connectors. • Clear the DTC from the memory using the WDS or equivalent. • Drive the vehicle under the following condition for **150 s or more**. — Vehicle speed (VSS PID) **20 km/h {12 mph} or more**. • Is the same DTC present?	Yes	Replace the PCM, then go to the next step. (See 01–40A–5 PCM REMOVAL/INSTALLATION [L8, LF].)
		No	Go to the next step.
9	**VERIFY AFTER REPAIR PROCEDURE** • Perform the “After Repair Procedure”. (See 05–02–4 AFTER REPAIR PROCEDURE [FN4A-EL].) • Are any DTCs present?	Yes	Go to the applicable DTC inspection.
		No	DTC troubleshooting completed.

DTC P0713 [FN4A-EL]

DPE050200000W12

DTC P0713	Transaxle fluid temperature (TFT) sensor circuit malfunction (open circuit)
DETECTION CONDITION	• If the PCM detects the following condition for **150 s or more**, the PCM determines that the TFT sensor circuit has a malfunction. — TFT sensor voltage **4.67 V or more** and vehicle speed **20 km/h {12 mph} or more** **Diagnostic support note:** • This is a continuous monitor (CCM). • The MIL illuminates if the PCM detects the above malfunction conditions during the first drive cycle. • A PENDING CODE is not available. • FREEZE FRAME DATA is available. • The AT warning light illuminates. • The DTC is stored in the PCM memory.
POSSIBLE CAUSE	• TFT sensor malfunction • Open circuit in wiring harness between TFT sensor and ATX terminal E • Open circuit in wiring harness between TFT sensor and ATX terminal H • Open circuit in wiring harness between ATX terminal E and PCM terminal 1U • Open circuit in wiring harness between ATX terminal H and PCM terminal 1AA • Damaged connectors between TFT sensor and PCM • PCM malfunction

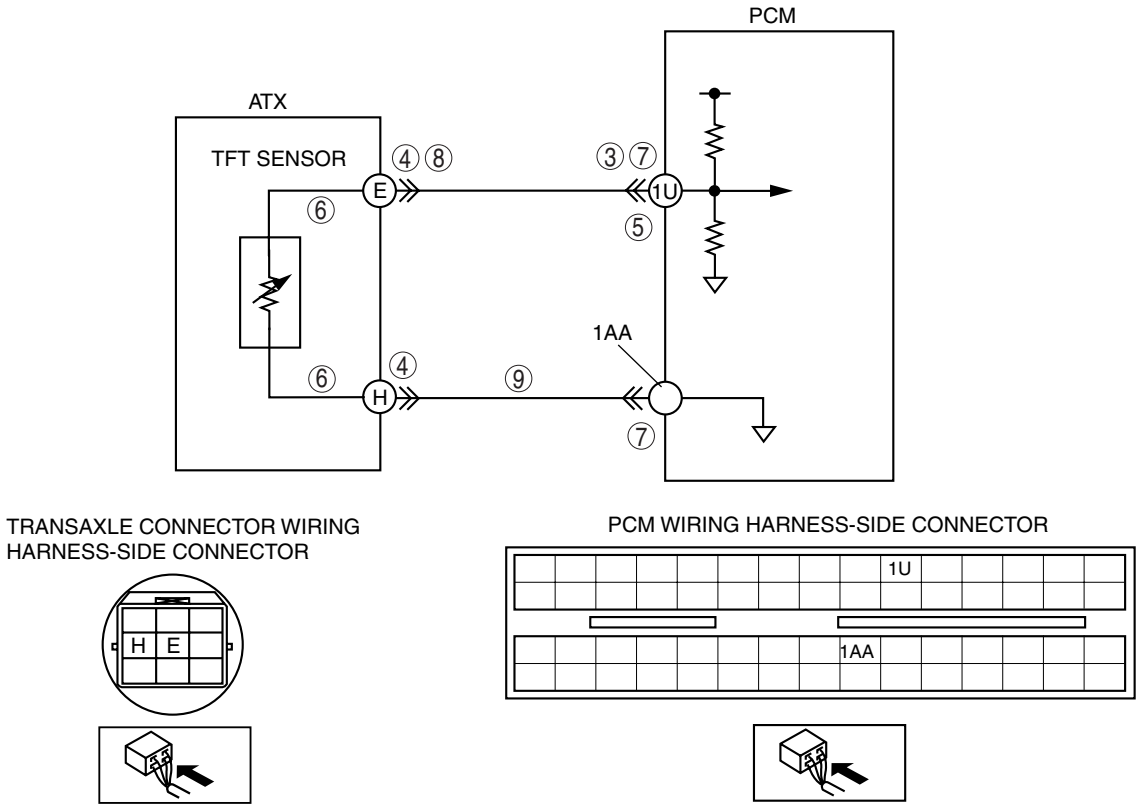

05

Diagnostic procedure

STEP	INSPECTION		ACTION
1	**VERIFY FREEZE FRAME DATA HAS BEEN RECORDED** • Has the FREEZE FRAME DATA been recorded?	Yes	Go to the next step.
		No	Record the FREEZE FRAME DATA on the repair order, then go to the next step.
2	**VERIFY RELATED REPAIR INFORMATION AVAILABILITY** • Verify related Service Bulletins and/or on-line repair information availability. • Is any related repair information available?	Yes	Perform repair or diagnosis according to the available repair information. • If the vehicle is not repaired, go to the next step.
		No	Go to the next step.
3	**VERIFY CURRENT INPUT SIGNAL STATUS** • Turn the ignition switch to the ON position (engine off). • Measure the voltage at PCM terminal 1U. • Is the voltage **4.67 V or less**?	Yes	Go to the intermittent concern troubleshooting procedure. (See 01–03A–55 INTERMITTENT CONCERN TROUBLESHOOTING [L8, LF].)
		No	Go to the next step.
4	**INSPECT ATX CONNECTOR FOR POOR CONNECTION** • Turn the ignition switch to the LOCK position. • Inspect ATX connector connection. • Disconnect the ATX connector. • Inspect for poor connection (such as damaged/ pulled-out pins, corrosion). • Is the connection normal?	Yes	Go to the next step.
		No	Repair or replace the connector and/or terminals, then go to Step 10.
5	**INSPECT TFT SENSOR CIRCUIT** • Turn the ignition switch to the ON position (engine off). • Measure the voltage at PCM terminal 1U when connect between ATX terminals E and H (wiring harness-side) using jumper wire. • Verify that voltage changes to **0.06 V or less**. • Does the voltage change?	Yes	Go to the next step.
		No	Go to Step 7.
6	**INSPECT TFT SENSOR CIRCUIT FOR OPEN CIRCUIT** • Inspect for continuity between ATX terminals (transaxle case side) E and H. • Is there continuity?	Yes	Replace the TFT sensor, then go to Step 10. (See 05–17–18 TRANSAXLE FLUID TEMPERATURE (TFT) SENSOR REMOVAL/INSTALLATION [FN4A-EL].)
		No	Repair or replace the wiring harness, then go to Step 10.
7	**INSPECT PCM CONNECTOR FOR POOR CONNECTION** • Turn the ignition switch to the LOCK position. • Disconnect the PCM connector. • Inspect for poor connection (such as damaged/ pulled-out pins, corrosion). • Is the connection normal?	Yes	Go to the next step.
		No	Repair or replace the connector and/or terminals, then go to Step 10.
8	**INSPECT WIRING HARNESS FOR OPEN CIRCUIT** • Disconnect the ATX connector. • Connect the PCM connector. • Turn the ignition switch to the ON position (engine off). • Inspect the voltage at ATX terminal E (vehicle wiring harness-side). • Is the voltage **5 V**?	Yes	Go to the next step.
		No	Repair or replace the wiring harness, then go to Step 10.
9	**INSPECT ATX CONNECTOR CIRCUIT FOR OPEN CIRCUIT** • Turn the ignition switch to the LOCK position. • Inspect for continuity between ATX terminal H (wiring harness-side) and body ground. • Is there continuity?	Yes	Go to the next step.
		No	Repair or replace the wiring harness, then go to the next step.

STEP	INSPECTION		ACTION
10	**VERIFY TROUBLESHOOTING OF DTC P0713 COMPLETED** • Make sure to reconnect all the disconnected connectors. • Clear the DTC from the memory using the WDS or equivalent. • Drive the vehicle under the following condition for **150 s or more**. — Vehicle speed (VSS PID) **20 km/h {12 mph} or more**. • Is the same DTC present?	Yes	Replace the PCM, then go to the next step. (See 01–40A–5 PCM REMOVAL/INSTALLATION [L8, LF].)
		No	Go to the next step.
11	**VERIFY AFTER REPAIR PROCEDURE** • Perform the “After Repair Procedure”. (See 05–02–4 AFTER REPAIR PROCEDURE [FN4A-EL].) • Are any DTCs present?	Yes	Go to the applicable DTC inspection.
		No	DTC troubleshooting completed.

DTC P0715 [FN4A-EL]

DPE050200000W13

DTC P0715	Input/turbine speed sensor circuit malfunction
DETECTION CONDITION	• When all conditions below are satisfied and **0.7 s or more** have passed. — D or M range of TR switch input — Driving vehicle at vehicle speed of **41 km/h {25 mph} or more** — Input/turbine speed sensor signal not input **Diagnostic support note:** • This is a continuous monitor (CCM). • The MIL illuminates if the PCM detects the above malfunction conditions during the first drive cycle. • A PENDING CODE is not available. • FREEZE FRAME DATA is available. • The AT warning light illuminates. • The DTC is stored in the PCM memory.
POSSIBLE CAUSE	• Input/turbine speed sensor malfunction • Short to ground in wiring harness between input/turbine speed sensor terminal A and PCM terminal 1Q • Short to ground in wiring harness between input/turbine speed sensor terminal B and PCM terminal 1M • Open circuit in wiring harness between input/turbine speed sensor terminal A and PCM terminal 1Q • Open circuit in wiring harness between input/turbine speed sensor terminal B and PCM terminal 1M • Damaged connectors between input/turbine speed sensor and PCM • PCM malfunction

DTC P0715	Input/turbine speed sensor circuit malfunction

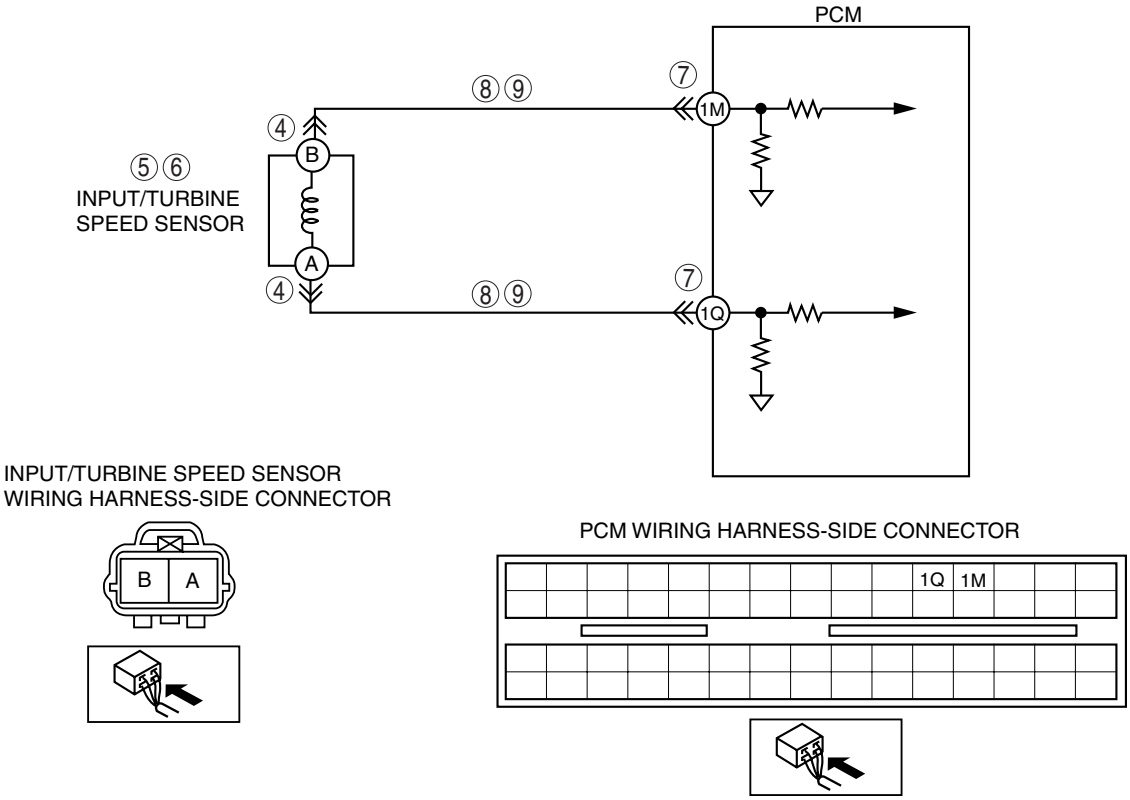

Diagnostic procedure

STEP	INSPECTION		ACTION
1	**VERIFY FREEZE FRAME DATA HAS BEEN RECORDED** • Has the FREEZE FRAME DATA been recorded?	Yes	Go to the next step.
		No	Record the FREEZE FRAME DATA on the repair order, then go to the next step.
2	**VERIFY RELATED REPAIR INFORMATION AVAILABILITY** • Verify related Service Bulletins and/or on-line repair information availability. • Is any related repair information available?	Yes	Perform repair or diagnosis according to the available repair information. • If the vehicle is not repaired, go to the next step.
		No	Go to the next step.
3	**VERIFY CURRENT INPUT SIGNAL STATUS** • Turn the ignition switch to the LOCK position. • Start the engine. • Measure the frequency of input/turbine speed sensor using a oscilloscope. — IG ON: **0 Hz** — Idle: **Within 320—374 Hz** (P, N position) • Are frequencies of input/turbine speed sensor within specifications?	Yes	Go to the intermittent concern troubleshooting procedure. (See 01–03A–55 INTERMITTENT CONCERN TROUBLESHOOTING [L8, LF].)
		No	Go to the next step.
4	**INSPECT INPUT/TURBINE SPEED SENSOR CONNECTOR FOR POOR CONNECTION** • Turn the ignition switch to the LOCK position. • Disconnect the input/turbine speed sensor connector. • Inspect for poor connection (such as damaged/ pulled-out pins, corrosion). • Is the connection normal?	Yes	Go to the next step.
		No	Repair or replace the connector and/or terminals, then go to Step 10.
5	**INSPECT INPUT/TURBINE SPEED SENSOR RESISTANCE** • Measure the resistance between the input/ turbine speed sensor terminals (part-side). • Is the resistance **within 250—600 ohms** between input/turbine speed sensor terminals (part-side)? (See 05–17–20 INPUT/TURBINE SPEED SENSOR INSPECTION [FN4A-EL].)	Yes	Go to the next step.
		No	Replace the input/turbine speed sensor, then go to Step 10. (See 05–17–20 INPUT/TURBINE SPEED SENSOR REMOVAL/INSTALLATION [FN4A-EL].)
6	**INSPECT INPUT/TURBINE SPEED SENSOR** • Remove input/turbine speed sensor. • Is there iron powder stuck on input/turbine speed sensor? (See 05–17–20 INPUT/TURBINE SPEED SENSOR REMOVAL/INSTALLATION [FN4A-EL].)	Yes	Clean the input/turbine speed sensor, then go to Step 10.
		No	Go to the next step.
7	**INSPECT PCM CONNECTOR FOR POOR CONNECTION** • Disconnect the PCM connector. • Inspect for poor connection (such as damaged/ pulled-out pins, corrosion). • Is the connection normal?	Yes	Go to the next step.
		No	Repair or replace the connector and/or terminals, then go to Step 10.
8	**INSPECT INPUT/TURBINE SPEED SENSOR CIRCUIT FOR OPEN CIRCUIT** • Inspect the following input/turbine speed sensor terminals (wiring harness-side) and PCM terminals (wiring harness-side): — A and 1Q — B and 1M • Is there continuity?	Yes	Go to the next step.
		No	Repair or replace the wiring harness, then go to Step 10.
9	**INSPECT INPUT/TURBINE SPEED SENSOR CIRCUIT FOR SHORT TO GROUND** • Inspect input/turbine speed sensor terminal (wiring harness-side) and body ground. — A and body ground — B and body ground • Is there continuity?	Yes	Repair or replace the wiring harness, then go to the next step.
		No	Go to the next step.

STEP	INSPECTION		ACTION
10	**VERIFY TROUBLESHOOTING OF DTC P0715 COMPLETED** • Make sure to reconnect all the disconnected connectors. • Clear the DTC from the memory using the WDS or equivalent. • Drive the vehicle a vehicle speed **41 km/h {25 mph} or more** for **0.7 s or more**. • Is the same DTC present?	Yes	Replace the PCM, then go to the next step. (See 01–40A–5 PCM REMOVAL/INSTALLATION [L8, LF].)
		No	Go to the next step.
11	**VERIFY AFTER REPAIR PROCEDURE** • Perform the “After Repair Procedure”. (See 05–02–4 AFTER REPAIR PROCEDURE [FN4A-EL].) • Are any DTCs present?	Yes	Go to the applicable DTC inspection.
		No	DTC troubleshooting completed.

DTC P0720 [FN4A-EL]

DPE050200000W06

DTC P0720	Vehicle speed sensor (VSS) circuit malfunction
DETECTION CONDITION	• Vehicle speed signal is not input after the following conditions are met and **4.5 s or more** have passed. — D, or M range switch ON — Engine coolant temperature **60 °C {140 °F} or more** — Turbine speed **1,500 rpm or more** **Diagnostic support note:** • This is a continuous monitor (CCM). • The MIL illuminates if the PCM detects the above malfunction condition in two consecutive drive cycles or in one drive cycle while the DTC for the same malfunction has been stored in the PCM. • The PENDING CODE is available if the PCM detects the above malfunction condition during the first drive cycle. • FREEZE FRAME DATA is available. • The AT warning light illuminates. • The DTC is stored in the PCM memory.
POSSIBLE CAUSE	• VSS malfunction • Open circuit in wiring harness between VSS terminal B and PCM terminal 1J • Short to ground in wiring harness between VSS terminal B and PCM terminal 1J • Open circuit in wiring harness between VSS terminal A and main relay terminal C • Short to ground in wiring harness between VSS terminal A and main relay terminal C • Open circuit in wiring harness between VSS terminal C and body ground • Damaged connectors between VSS and PCM • PCM malfunction

DTC P0720	Vehicle speed sensor (VSS) circuit malfunction

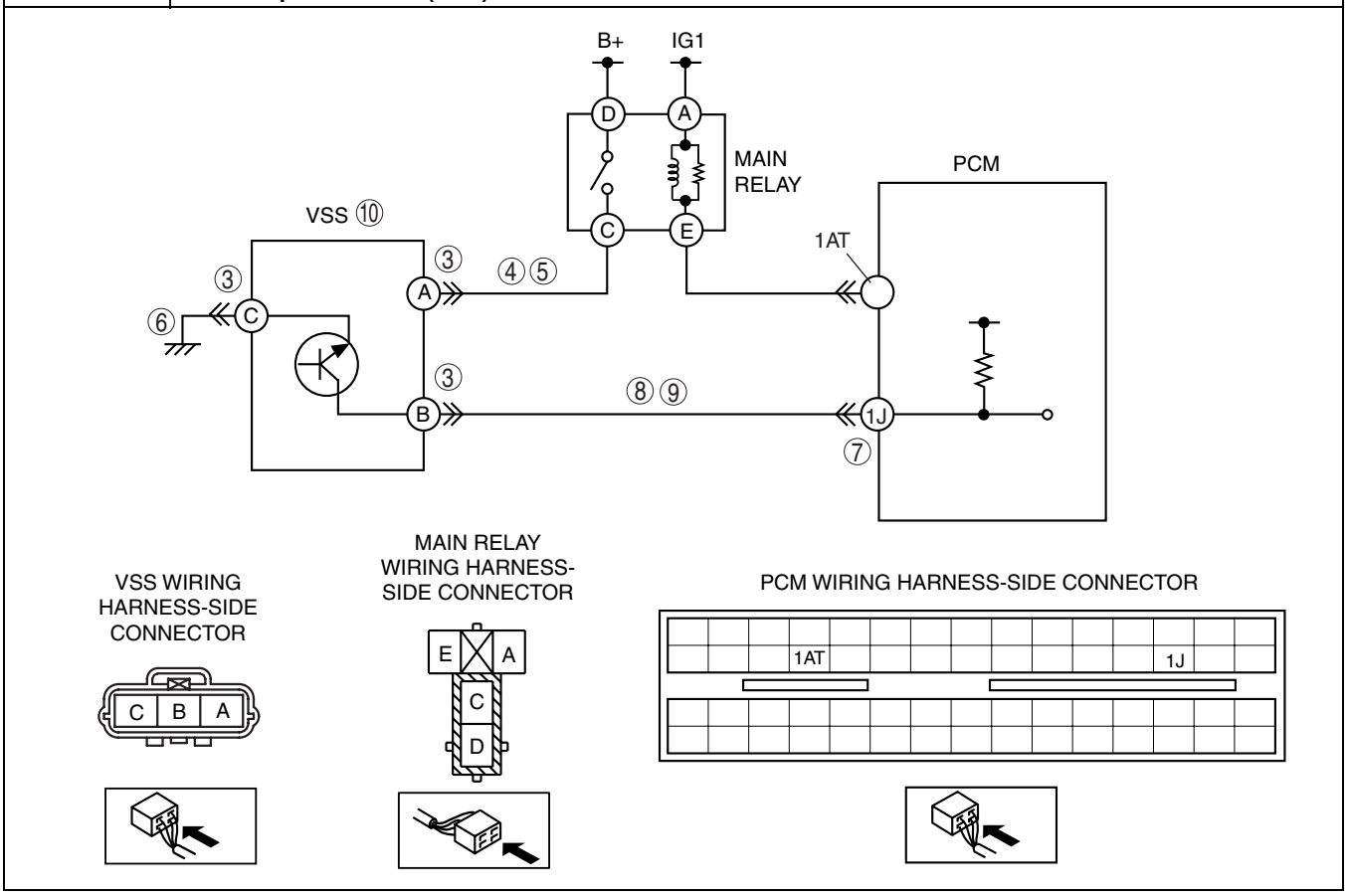

Diagnostic procedure

STEP	INSPECTION		ACTION
1	**VERIFY FREEZE FRAME DATA HAS BEEN RECORDED** • Has the FREEZE FRAME DATA been recorded?	Yes	Go to the next step.
		No	Record the FREEZE FRAME DATA on the repair order, then go to the next step.
2	**VERIFY RELATED SERVICE INFORMATION AVAILABILITY** • Verify related Service Bulletins and/or on-line repair information availability. • Is any related repair Information available?	Yes	Perform repair or diagnosis according to the available repair information. • If the vehicle is not repaired, go to the next step.
		No	Go to the next step.
3	**INSPECT VSS CONNECTOR FOR POOR CONNECTION** • Turn the ignition switch to the LOCK position. • Disconnect the VSS connector. • Inspect for poor connection (such as damaged/ pulled-out pins, corrosion). • Is the connection normal?	Yes	Go to the next step.
		No	Repair or replace the pin or connector, then go to Step 11.
4	**INSPECT VSS POWER CIRCUIT FOR OPEN CIRCUIT** • Verify that the VSS connector is disconnected. • Turn the ignition switch to the ON position (engine off). • Inspect the voltage between VSS terminal A (wiring harness-side) and ground. • Is the voltage **B+**?	Yes	Go to Step 6.
		No	Go to the next step.
5	**INSPECT VSS POWER CIRCUIT FOR SHORT TO GROUND** • Turn the ignition switch to the LOCK position. • Inspect for continuity between VSS terminal A (wiring harness-side) and ground. • Is there continuity?	Yes	Go to the next step.
		No	Repair or replace the wiring harness, then go to Step 11.
6	**INSPECT VSS GROUND CIRCUIT FOR OPEN CIRCUIT** • Verify that the VSS connector is disconnected. • Inspect for continuity between VSS (wiring harness-side) terminal C and ground. • Is there continuity?	Yes	Go to the next step.
		No	Repair or replace the wiring harness, then go to Step 11.
7	**INSPECT PCM CONNECTOR FOR POOR CONNECTION** • Disconnect the PCM connector. • Inspect for poor connection (such as damaged/ pulled-out pins, corrosion). • Is the connection normal?	Yes	Go to the next step.
		No	Repair or replace the pin or connector, then go to Step 11.
8	**INSPECT VEHICLE SPEED SIGNAL CIRCUIT FOR OPEN CIRCUIT** • Disconnect the PCM connector and VSS connector. • Inspect for continuity between VSS terminal B and PCM terminal 1J. • Is there continuity?	Yes	Go to the next step.
		No	Repair or replace the wiring harness, then go to Step 11.
9	**INSPECT VEHICLE SPEED SIGNAL CIRCUIT FOR SHORT TO GROUND** • Verity that the VSS connector and PCM connector are disconnected. • Inspect for continuity between PCM terminal 1J and body ground. • Is there continuity?	Yes	Repair or replace the wiring harness, then go to the next step.
		No	Replace the VSS, then go to the next step. (See 05–17–22 VEHICLE SPEED SENSOR (VSS) REMOVAL/INSTALLATION [FN4A-EL].)
10	**INSPECT VEHICLE SPEED SENSOR** • Inspect the VSS. (See 05–17–21 VEHICLE SPEED SENSOR (VSS) INSPECTION [FN4A-EL].) • Is VSS normal?	Yes	Go to the next step.
		No	Repair or replace the VSS, then go to Step 11.

STEP	INSPECTION		ACTION
11	**VERIFY TROUBLESHOOTING OF DTC P0720 COMPLETED** • Make sure to reconnect all the disconnected connectors. • Clear the DTC from the memory using the WDS or equivalent. • Warm up engine. • Drive the vehicle under the following conditions for **4.5 s or more** while monitoring PIDs. — Engine coolant temp (ECT PID): **60 °C {140 °F} or more** — Drive in D or M range — Frequency of input/turbine speed sensor: **800 Hz or more** • Is the PENDING CODE present?	Yes	Replace the PCM, then go to the next step. (See 01–40A–5 PCM REMOVAL/INSTALLATION [L8, LF].)
		No	No concern is detected. Go to the next step.
12	**VERIFY AFTER REPAIR PROCEDURE** • Perform the “After Repair Procedure”. (See 05–02–4 AFTER REPAIR PROCEDURE [FN4A-EL].) • Are any DTCs present?	Yes	Go to the applicable DTC inspection.
		No	DTC troubleshooting completed.

DTC P0731 [FN4A-EL]

DPE050200000W14

DTC P0731	Gear 1 incorrect (incorrect gear ratio detected)
DETECTION CONDITION	• The PCM monitors the revolution ratio of the forward clutch drum revolution to differential gear case revolution when the following monitoring conditions are met. If the revolution ratio is **2.185 or less**, the PCM determines that there is a malfunction. **Monitoring conditions:** — ATF temperature **20 °C {68 °F} or more** — Driving in 1GR in D or M range — Engine running — Turbine speed **within 225—4,987 rpm** — Throttle opening angle **2.27% or more** — Differential gear case (output) revolution speed **35 rpm or more**. — None of the following DTCs are present: P0706, P0707, P0708, P0712, P0713, P0715, P0720, P0751, P0752, P0753, P0756, P0757, P0758, P0761, P0762, P0763, P0766, P0767, P0768, P0771, P0772, P0773 **Diagnostic support note:** • This is a continuous monitor (CCM). • The MIL does not illuminate. • The AT warning light illuminates if the PCM detects the above malfunction condition during the first drive cycle. • FREEZE FRAME DATA is not available. • A PENDING CODE is not available. • The DTC is stored in the PCM memory.
POSSIBLE CAUSE	• ATF level low • Deteriorated ATF • Shift solenoid A stuck • Pressure control solenoid stuck • Line pressure low • One-way clutch slipping • Forward clutch slipping • Control valve stuck • Oil pump malfunction • PCM malfunction

Diagnostic procedure

STEP	INSPECTION		ACTION
1	**VERIFY RELATED REPAIR INFORMATION AVAILABILITY** • Verify related Service Bulletins and/or on-line repair information availability. • Is any related repair information available?	Yes	Perform repair or diagnosis according to the available repair information.
		No	Go to the next step.
2	**INSPECT ATF CONDITION** • Inspect the ATF condition. (See 05–17–7 AUTOMATIC TRANSAXLE FLUID (ATF) INSPECTION [FN4A-EL].) • Is it normal?	Yes	Go to the next step.
		No	Replace the transaxle, then go to Step 8.
3	**INSPECT ATF LEVEL** • Start the engine. • Warm up the ATX. • Is the ATF level within the specification? (See 05–17–7 AUTOMATIC TRANSAXLE FLUID (ATF) INSPECTION [FN4A-EL].)	Yes	Go to the next step.
		No	Add ATF to the specified level, then go to Step 8.
4	**INSPECT SHIFT SOLENOID VALVE A** • Perform operation inspection. (See 05–17–23 SOLENOID VALVE INSPECTION [FN4A-EL].) • Verify the click sound of shift solenoid A when applying B+ to transaxle terminal A. • Was a click heard from solenoids?	Yes	Go to the next step.
		No	Replace the solenoid that you could not hear a click sound, then go to Step 8. (See 05–17–25 SOLENOID VALVE REMOVAL/ INSTALLATION [FN4A-EL].)
5	**INSPECT LINE PRESSURE** • Start the engine. • Measure the line pressures. **Specification** **Idle: 330—470 kPa {3.4—4.7 kgf/cm^2, 48—68 psi}** **Stall: 1,160—1,320 kPa {11.8—13.5 kgf/cm^2, 168—191 psi}** • Are the line pressures within the specifications? (See 05–17–3 Line Pressure Test.)	Yes	Go to the next step.
		No	All ranges: Replace the oil pump, then go to Step 8. Any ranges: Replace the control valve body, then go to Step 8. (See 05–17–32 CONTROL VALVE BODY REMOVAL [FN4A-EL].) (See 05–17–33 CONTROL VALVE BODY INSTALLATION [FN4A-EL].)
6	**INSPECT STALL SPEED** • Measure the stall speed in D range. (See 05–17–4 Stall Test.) **Specification** **2,200—2,800 rpm** • Is the stall speed within the specification?	Yes	Go to the next step.
		No	Replace the automatic transaxle, then go to Step 8. (See 05–17–26 AUTOMATIC TRANSAXLE REMOVAL/ INSTALLATION [FN4A-EL].)
7	**INSPECT FREQUENCY OF INPUT/TURBINE SPEED SENSOR WHEN DRIVING VEHICLE** • Turn the ignition switch to the LOCK position. • Connect the WDS or equivalent. • Start the engine. • Measure the frequency of input/turbine speed sensor while driving vehicle under the following conditions: — Vehicle speed (VSS PID): **20 km/h {12 mph}** — Drive in the D range, 1GR — Throttle opening angle (TP PID): **approx. 25%** • Was the frequency of the input/turbine speed sensor at **approx. 1,100 Hz**?	Yes	Go to the next step.
		No	Replace the control valve body, then go to the next step. (See 05–17–32 CONTROL VALVE BODY REMOVAL [FN4A-EL].) (See 05–17–33 CONTROL VALVE BODY INSTALLATION [FN4A-EL].)

STEP	INSPECTION		ACTION
8	**VERIFY REPAIR OF DTC P0731** • Make sure to reconnect all the disconnected connectors. • Clear the DTC using the WDS or equivalent. • Start the engine. • Warm up the transaxle. • Drive the vehicle under the following conditions at least 4 times for **more than 1 s**: — ATF temperature: **20 °C {68 °F} or more** — Drive in the D range, 1GR — Throttle opening angle (TP PID): **2.27% or more** — Vehicle speed (VSS PID): **4 km/h {3 mph} or more** • Are any DTCs present?	Yes	Replace the PCM, then go to the next step. (See 01–40A–5 PCM REMOVAL/INSTALLATION [L8, LF].)
		No	Go to the next step.
9	**VERIFY AFTER REPAIR PROCEDURE** • Perform the “After Repair Procedure”. (See 05–02–4 AFTER REPAIR PROCEDURE [FN4A-EL].) • Are any DTCs present?	Yes	Go to the applicable DTC inspection.
		No	DTC troubleshooting completed.

DTC P0732 [FN4A-EL]

DPE050200000W15

DTC P0732	Gear 2 incorrect (incorrect gear ratio detected)
DETECTION CONDITION	• The PCM comperes the revolution ratio of the forward clutch drum to the differential gear case revolution when the following monitoring conditions are met. If revolution ratio is **1.277 or less** or **2.185 or more**, the PCM determines that there is a malfunction. **Monitoring conditions:** — ATF temperature **20 °C {68 °F} or more** — Driving in 2 GR in D or M range — Engine running — Turbine speed **within 225—4,987 rpm** — Differential gear case (output) revolution speed **35 rpm or more** — None of the following DTCs are present: P0706, P0707, P0708, P0712, P0713, P0715, P0720, P0751, P0752, P0753, P0756, P0757, P0758, P0761, P0762, P0763, P0766, P0767, P0768, P0771, P0772, P0773 **Diagnostic support note:** • This is a continuous monitor (CCM). • The MIL does not illuminate. • The AT warning light illuminates if the PCM detects the above malfunction condition during the first drive cycle. • FREEZE FRAME DATA is not available. • A PENDING CODE is not available. • The DTC is stored in the PCM memory.
POSSIBLE CAUSE	• ATF level low • Deteriorated ATF • Shift solenoids A, B or C stuck • Pressure control solenoid stuck • Line pressure low • 2-4 brake band slipping • Forward clutch slipping • Control valve stuck • Oil pump malfunction • PCM malfunction

Diagnostic procedure

STEP	INSPECTION		ACTION
1	**VERIFY RELATED REPAIR INFORMATION AVAILABILITY** • Verify related Service Bulletins and/or on-line repair information availability. • Is any related repair information available?	Yes	Perform repair or diagnosis according to the available repair information.
		No	Go to the next step.
2	**INSPECT ATF CONDITION** • Inspect the ATF condition. (See 05–17–7 AUTOMATIC TRANSAXLE FLUID (ATF) INSPECTION [FN4A-EL].) • Is it normal?	Yes	Go to the next step.
		No	Replace the transaxle, then go to Step 8.
3	**INSPECT ATF LEVEL** • Start the engine. • Warm up the ATX. • Is the ATF level within the specification? (See 05–17–7 AUTOMATIC TRANSAXLE FLUID (ATF) INSPECTION [FN4A-EL].)	Yes	Go to the next step.
		No	Add ATF to the specified level, then go to Step 8.
4	**INSPECTION SHIFT SOLENOID VALVE A, B AND C FOR CLICK SOUND** • Perform operation inspection. (See 05–17–23 SOLENOID VALVE INSPECTION [FN4A-EL].) • Verify the click sound of shift solenoid A, B, and C when applying B+ to each transaxle terminal. • Was a click heard from solenoids?	Yes	Go to the next step.
		No	Replace the solenoid where you could not hear a click sound, then go to Step 8. (See 05–17–25 SOLENOID VALVE REMOVAL/ INSTALLATION [FN4A-EL].)
5	**INSPECT LINE PRESSURE** • Start the engine. • Measure the line pressures. **Specification** **Idle: 330—470 kPa {3.4—4.7 kgf/cm^2, 48—68 psi}** **Stall: 1,160—1,320 kPa {11.8—13.5 kgf/cm^2, 168—191 psi}** • Are the line pressures within the specifications? (See 05–17–3 Line Pressure Test.)	Yes	Go to the next step.
		No	All ranges: Replace the oil pump, then go to Step 8. Any ranges: Replace the control valve body, then go to Step 8. (See 05–17–32 CONTROL VALVE BODY REMOVAL [FN4A-EL].) (See 05–17–33 CONTROL VALVE BODY INSTALLATION [FN4A-EL].)
6	**INSPECT STALL SPEED** • Measure the stall speed in D range. (See 05–17–4 Stall Test.) **Specification** **2,200—2,800 rpm** • Is the stall speed within the specification?	Yes	Go to the next step.
		No	Replace the automatic transaxle, then go to Step 8. (See 05–17–26 AUTOMATIC TRANSAXLE REMOVAL/ INSTALLATION [FN4A-EL].)
7	**INSPECT FREQUENCY OF INPUT/TURBINE SPEED SENSOR WHEN DRIVING VEHICLE** • Turn the ignition switch to the LOCK position. • Connect the WDS or equivalent. • Start the engine. • Measure the frequency of input/turbine speed sensor while driving vehicle under the following conditions: — Vehicle speed (VSS PID): **40 km/h {24 mph}** — Drive in the D range, 2GR — Throttle opening angle (TP PID): **approx. 25%** • Was the frequency of the input/turbine speed sensor at **approx. 1,250 Hz**?	Yes	Go to the next step.
		No	Replace the control valve body, then go to the next step. (See 05–17–32 CONTROL VALVE BODY REMOVAL [FN4A-EL].) (See 05–17–33 CONTROL VALVE BODY INSTALLATION [FN4A-EL].)

STEP	INSPECTION		ACTION
8	**VERIFY REPAIR OF DTC P0732** • Make sure to reconnect all the disconnected connectors. • Clear the DTC using the WDS or equivalent. • Start the engine. • Warm up the transaxle. • Drive the vehicle under the following conditions at least 3 times for **more than 1 s**: — ATF temperature: **20 °C {68 °F} or more** — Drive in the D range, 2GR — Vehicle speed (VSS PID): **3.8 km/h {2.4 mph} or more** • Are any DTCs present?	Yes	Replace the PCM, then go to the next step. (See 01–40A–5 PCM REMOVAL/INSTALLATION [L8, LF].)
		No	Go to the next step.
9	**VERIFY AFTER REPAIR PROCEDURE** • Perform the “After Repair Procedure”. (See 05–02–4 AFTER REPAIR PROCEDURE [FN4A-EL].) • Are any DTCs present?	Yes	Go to the applicable DTC inspection.
		No	DTC troubleshooting completed.

DTC P0733 [FN4A-EL]

DPE050200000W16

DTC P0733	Gear 3 incorrect (incorrect gear ratio detected)
DETECTION CONDITION	• The PCM comperes the revolution ratio of the forward clutch drum to the differential gear case revolution when the following monitoring conditions are met. If the revolution ratio is **0.848 or less** or **2.185 or more**, the PCM determines that there is a malfunction. **Monitoring conditions:** — ATF temperature **20 °C {68 °F} or more** — Driving in 3 GR in D or M range — Engine running — Turbine speed **within 225—4,987 rpm** — Differential gear case (output) revolution speed **35 rpm or more** — None of the following DTCs are present: P0706, P0707, P0708, P0712, P0713, P0715, P0720, P0751, P0752, P0753, P0756, P0757, P0758, P0761, P0762, P0763, P0766, P0767, P0768, P0771, P0772, P0773 • The PCM comperes the revolution ratio of the forward clutch drum to the differential gear case revolution when the following monitoring conditions are met. If the revolution ratio is **within 1.404—1.704**, the PCM determines that there is a malfunction. **Monitoring conditions:** — ATF temperature **20 °C {68 °F} or more** — Driving in 3 GR in D or M range — Torque converter clutch (TCC) not operating — Engine running — Vehicle speed **18 km/h {11 mph} or more** — Turbine speed **within 225—4,987 rpm** — Differential gear case (output) revolution speed **35 rpm or more** — None of the following DTCs are present: P0706, P0707, P0708, P0712, P0713, P0715, P0720, P0751, P0752, P0753, P0756, P0757, P0758, P0761, P0762, P0763, P0766, P0767, P0768, P0771, P0772, P0773 **Diagnostic support note:** • This is a continuous monitor (CCM). • The MIL does not illuminate. • The AT warning light illuminates if the PCM detects the above malfunction condition during the first drive cycle. • FREEZE FRAME DATA is not available. • A PENDING CODE is not available. • The DTC is stored in the PCM memory.
POSSIBLE CAUSE	• ATF level low • Deteriorated ATF • Shift solenoids A or C stuck • Pressure control solenoid stuck • Line pressure low • 3-4 clutch slipping • Forward clutch slipping • Control valve stuck (Bypass, TCC or 3-4 shift valve) • Oil pump malfunction • PCM malfunction

Diagnostic procedure

STEP	INSPECTION		ACTION
1	**VERIFY RELATED REPAIR INFORMATION AVAILABILITY** • Verify related Service Bulletins and/or on-line repair information availability. • Is any related repair information available?	Yes	Perform repair or diagnosis according to the available repair information.
		No	Go to the next step.
2	**INSPECT ATF CONDITION** • Inspect the ATF condition. (See 05–17–7 AUTOMATIC TRANSAXLE FLUID (ATF) INSPECTION [FN4A-EL].) • Is it normal?	Yes	Go to the next step.
		No	Replace the transaxle, then go to Step 8.
3	**INSPECT ATF LEVEL** • Start the engine. • Warm up the ATX. • Is the ATF level within the specification? (See 05–17–7 AUTOMATIC TRANSAXLE FLUID (ATF) INSPECTION [FN4A-EL].)	Yes	Go to the next step.
		No	Add ATF to the specified level, then go to Step 8.
4	**INSPECTION SHIFT SOLENOID VALVE A AND C FOR CLICK SOUND** • Perform operation inspection. (See 05–17–23 SOLENOID VALVE INSPECTION [FN4A-EL].) • Verify the click sound of shift solenoid A and C when applying B+ to each transaxle terminal. • Was a click heard from solenoids?	Yes	Go to the next step.
		No	Replace the solenoid where you could not hear a click sound, then go to Step 8. (See 05–17–25 SOLENOID VALVE REMOVAL/ INSTALLATION [FN4A-EL].)
5	**INSPECT LINE PRESSURE** • Start the engine. • Measure the line pressures. **Specification** **Idle: 330—470 kPa {3.4—4.7 kgf/cm^2, 48—68 psi}** **Stall: 1,160—1,320 kPa {11.8—13.5 kgf/cm^2, 168—191 psi}** • Are the line pressures within the specifications? (See 05–17–3 Line Pressure Test.)	Yes	Go to the next step.
		No	All ranges: Replace the oil pump, then go to Step 8. Any ranges: Replace the control valve body, then go to Step 8. (See 05–17–32 CONTROL VALVE BODY REMOVAL [FN4A-EL].) (See 05–17–33 CONTROL VALVE BODY INSTALLATION [FN4A-EL].)
6	**INSPECT STALL SPEED** • Measure the stall speed in D range. (See 05–17–4 Stall Test.) **Specification** **2,200—2,800 rpm** • Is the stall speed within the specification?	Yes	Go to the next step.
		No	Replace the automatic transaxle, then go to Step 8. (See 05–17–26 AUTOMATIC TRANSAXLE REMOVAL/ INSTALLATION [FN4A-EL].)
7	**INSPECT FREQUENCY OF INPUT/TURBINE SPEED SENSOR WHEN DRIVING VEHICLE** • Turn the ignition switch to the LOCK position. • Connect the WDS or equivalent. • Start the engine. • Measure the frequency of input/turbine speed sensor while driving vehicle under the following conditions: — Vehicle speed (VSS PID): **60 km/h {37 mph}** — Drive in the D range, 3GR — Throttle opening angle (TP PID): **approx. 25%** • Was the frequency of the input/turbine speed sensor at **approx. 1,200 Hz**?	Yes	Go to the next step.
		No	Replace the control valve body, then go to the next step. (See 05–17–32 CONTROL VALVE BODY REMOVAL [FN4A-EL].) (See 05–17–33 CONTROL VALVE BODY INSTALLATION [FN4A-EL].)

STEP	INSPECTION		ACTION
8	**VERIFY REPAIR OF DTC P0733** • Make sure to reconnect all the disconnected connectors. • Clear the DTC using the WDS or equivalent. • Start the engine. • Warm up the transaxle. • Drive the vehicle under the following conditions for **more than 2 s**: — ATF temperature: **20 °C {68 °F} or more** — Drive in the D range, 3GR — Vehicle speed (VSS PID): **4 km/h {3 mph} or more** • Are any DTCs present?	Yes	Replace the PCM, then go to the next step. (See 01–40A–5 PCM REMOVAL/INSTALLATION [L8, LF].)
		No	Go to the next step.
9	**VERIFY AFTER REPAIR PROCEDURE** • Perform the “After Repair Procedure”. (See 05–02–4 AFTER REPAIR PROCEDURE [FN4A-EL].) • Are any DTCs present?	Yes	Go to the applicable DTC inspection.
		No	DTC troubleshooting completed.

DTC P0734 [FN4A-EL]

DPE050200000W17

DTC P0734	Gear 4 incorrect (incorrect gear ratio detected)
DETECTION CONDITION	• The PCM monitors revolution ratio of the forward clutch drum revolution to the differential gear case revolution when the following monitoring conditions are met. If the revolution ratio is **0.6 or less** or **1.277 or more**, the PCM determines that there is a malfunction. **Monitoring conditions:** — ATF temperature **20 °C {68 °F} or more** — Driving in 4GR in D or M range — Engine running — Turbine speed **within 225—4,987 rpm** — Vehicle speed **29 km/h {18 mph} or more** — Throttle opening angle at closed throttle position — Differential gear case (output) revolution speed **35 rpm or more** — None of the following DTCs are present: P0706, P0707, P0708, P0712, P0713, P0715, P0720, P0751, P0752, P0753, P0756, P0757, P0758, P0761, P0762, P0763, P0766, P0767, P0768, P0771, P0772, P0773 • The PCM comperes the revolution ratio of the forward clutch drum to the differential gear case revolution when the following monitoring conditions are met. If the revolution ratio is **within 0.91—1.09**, the PCM determines that there is a malfunction. **Monitoring conditions:** — ATF temperature **20 °C {68 °F} or more** — Driving in 4GR in D or M range — Torque converter clutch (TCC) not operating — Engine running — Vehicle speed **29 km/h {18 mph} or more** — Turbine speed **within 225—4,987 rpm** — Differential gear case (output) revolution speed **35 rpm or more** — None of the following DTCs are present: P0706, P0707, P0708, P0712, P0713, P0715, P0720, P0751, P0752, P0753, P0756, P0757, P0758, P0761, P0762, P0763, P0766, P0767, P0768, P0771, P0772, P0773 **Diagnostic support note:** • This is a continuous monitor (CCM). • The MIL does not illuminate. • The AT warning light illuminates if the PCM detects the above malfunction condition during the first drive cycle. • FREEZE FRAME DATA is not available. • A PENDING CODE is not available. • The DTC is stored in the PCM memory.

DTC P0734	Gear 4 incorrect (incorrect gear ratio detected)
POSSIBLE CAUSE	• ATF level low • Deteriorated ATF • Shift solenoids A, B or C stuck • Pressure control solenoid stuck • Line pressure low • 2-4 brake band slipping • 3-4 clutch slipping • Forward clutch slipping • Control valve stuck (Bypass or 3-4 shift valve) • Oil pump malfunction • PCM malfunction

Diagnostic procedure

STEP	INSPECTION		ACTION
1	**VERIFY RELATED REPAIR INFORMATION AVAILABILITY** • Verify related Service Bulletins and/or on-line repair information availability. • Is any related repair information available?	Yes	Perform repair or diagnosis according to the available repair information.
		No	Go to the next step.
2	**INSPECT ATF CONDITION** • Inspect the ATF condition. (See 05–17–7 AUTOMATIC TRANSAXLE FLUID (ATF) INSPECTION [FN4A-EL].) • Is it normal?	Yes	Go to the next step.
		No	Replace the transaxle, then go to Step 8.
3	**INSPECT ATF LEVEL** • Start the engine. • Warm up the ATX. • Is the ATF level within the specification? (See 05–17–7 AUTOMATIC TRANSAXLE FLUID (ATF) INSPECTION [FN4A-EL].)	Yes	Go to the next step.
		No	Add ATF to the specified level, then go to Step 8.
4	**INSPECT SHIFT SOLENOID VALVE A AND D FOR CLICK SOUND** • Perform operation inspection. (See 05–17–23 SOLENOID VALVE INSPECTION [FN4A-EL].) • Verify the click sound of shift solenoids A and D when applying B+ to each transaxle terminal. **Note** • The click from solenoid D is barely audible. Remove solenoids to correctly inspect if necessary. • Was a click heard from solenoids?	Yes	Go to the next step.
		No	Replace the solenoid where you could not hear click sound, then go to Step 8. (See 05–17–25 SOLENOID VALVE REMOVAL/ INSTALLATION [FN4A-EL].)
5	**INSPECT LINE PRESSURE** • Start the engine. • Measure the line pressures. **Specification** **Idle: 330—470 kPa {3.4—4.7 kgf/cm^2, 48—68 psi}** **Stall: 1,160—1,320 kPa {11.8—13.5 kgf/cm^2, 168—191 psi}** • Are the line pressures within the specifications? (See 05–17–3 Line Pressure Test.)	Yes	Go to the next step.
		No	All ranges: Replace the oil pump, then go to Step 8. Any ranges: Replace the control valve body, then go to Step 8. (See 05–17–32 CONTROL VALVE BODY REMOVAL [FN4A-EL].) (See 05–17–33 CONTROL VALVE BODY INSTALLATION [FN4A-EL].)
6	**INSPECT STALL SPEED** • Measure the stall speed in D range. (See 05–17–4 Stall Test.) **Specification** **2,200—2,800 rpm** • Is the stall speed within the specification?	Yes	Go to the next step.
		No	Replace the automatic transaxle, then go to Step 8. (See 05–17–26 AUTOMATIC TRANSAXLE REMOVAL/ INSTALLATION [FN4A-EL].)
7	**INSPECT FREQUENCY OF INPUT/TURBINE SPEED SENSOR WHEN DRIVING VEHICLE** • Turn the ignition switch to the LOCK position. • Connect the WDS or equivalent. • Start the engine. • Measure the frequency of input/turbine speed sensor while driving vehicle under the following conditions: — Vehicle speed (VSS PID): **80 km/h {49 mph}** — Drive in the D range, 4GR — Throttle opening angle (TP PID): **approx. 25%** • Was the frequency of the input/turbine speed sensor at **approx. 1,100 Hz**?	Yes	Go to the next step.
		No	Replace the control valve body, then go to the next step. (See 05–17–32 CONTROL VALVE BODY REMOVAL [FN4A-EL].) (See 05–17–33 CONTROL VALVE BODY INSTALLATION [FN4A-EL].)

STEP	INSPECTION		ACTION
8	**VERIFY REPAIR OF DTC P0734** • Make sure to reconnect all the disconnected connectors. • Clear the DTC using the WDS or equivalent. • Start the engine. • Warm up the transaxle. • Drive the vehicle under the following conditions for **more than 5 s**: — ATF temperature: **20 °C {68 °F} or more** — Drive in the D range, 4GR — Throttle opening angle (TP PID): **0%** — Vehicle speed (VSS PID): **29 km/h {18 mph} or more** • Are any DTCs present?	Yes	Replace the PCM, then go to the next step. (See 01–40A–5 PCM REMOVAL/INSTALLATION [L8, LF].)
		No	Go to the next step.
9	**VERIFY AFTER REPAIR PROCEDURE** • Perform the “After Repair Procedure”. (See 05–02–4 AFTER REPAIR PROCEDURE [FN4A-EL].) • Are any DTCs present?	Yes	Go to the applicable DTC inspection.
		No	DTC troubleshooting completed.

DTC P0741 [FN4A-EL]

DPE050200000W18

DTC P0741	Torque converter clutch (TCC) stuck off
DETECTION CONDITION	• When all conditions below are satisfied. — ATF temperature **20 °C {68 °F} or more** — Driving in 4GR at D range — Engine running — Turbine speed **within 225—4,987 rpm** — Vehicle speed **within 60—100 km/h {37—62 mph}** — Torque converter clutch (TCC) operating — Shift solenoid A duty value exceeds **99%** — Normal mode — Difference between engine speed and turbine speed **more than 100 rpm** — None of the following DTCs are present: P0706, P0707, P0708, P0712, P0713, P0715, P0720, P0751, P0752, P0753, P0756, P0757, P0758, P0761, P0762, P0763, P0766, P0767, P0768, P0771, P0772, P0773 **Diagnostic support note:** • This is a continuous monitor (CCM). • The MIL does not illuminate if PCM detects the above malfunction conditions during first the drive cycle. • A PENDING CODE is not available. • FREEZE FRAME DATA is not available. • The AT warning light illuminates • The DTC is stored in the PCM memory.
POSSIBLE CAUSE	• ATF level low • Deteriorated ATF • Shift solenoids A, B, C, D, E, and pressure control solenoid stuck • Line pressure low • 2-4 brake band slipping • 3-4 clutch slipping • Control valve stuck • PCM malfunction

Diagnostic procedure

STEP	INSPECTION		ACTION
1	**VERIFY RELATED REPAIR INFORMATION AVAILABILITY** • Verify related Service Bulletins and/or on-line repair information availability. • Is any related repair information available?	Yes	Perform repair or diagnosis according to the available repair information. • If the vehicle is not repaired, go to the next step.
		No	Go to the next step.
2	**INSPECT ATF CONDITION** • Turn the ignition switch to the LOCK position. • Inspect the ATF condition. — Clear red: Normal — Milky: Water mixed in fluid — Reddish brown: Deteriorated ATF • Is it normal? (See 05–17–7 Automatic Transaxle Fluid (ATF) Condition Inspection.)	Yes	Go to the next step.
		No	If the ATF color is milky or reddish brown, replace ATF, then go to Step 4. (See 05–17–9 AUTOMATIC TRANSAXLE FLUID (ATF) REPLACEMENT [FN4A-EL].)
3	**INSPECT ATF LEVEL** • Start the engine. • Warm up the ATX. • Is the ATF level within the specification? (See 05–17–8 Automatic Transaxle Fluid (ATF) Level Inspection.)	Yes	Go to the next step.
		No	Add ATF to the specified level, then go to Step 6. (See 05–17–8 Automatic Transaxle Fluid (ATF) Level Inspection.)
4	**INSPECT LINE PRESSURE** • Start the engine. • Measure the line pressure. **Specification** **Idle: 330—470 kPa {3.4—4.7 kgf/cm^2, 48—68 psi}** **Stall: 1,160—1,320 kPa {11.8—13.5 kgf/cm^2, 168—191 psi}** • Are the line pressures within the specifications? (See 05–17–3 Line Pressure Test.)	Yes	Go to the next step.
		No	• All ranges: Replace the oil pump or control valve body, then go to Step 6. • Any ranges: Replace the automatic transaxle, then go to Step 6. (See 05–17–26 AUTOMATIC TRANSAXLE REMOVAL/ INSTALLATION [FN4A-EL].) (See ATX Workshop Manual FN4A-EL.)
5	**INSPECT OPERATION OF EACH VALVE AND EACH SPRING** • Turn the ignition switch to the LOCK position. • Remove the control valve body. • Disassemble the control valve body. • Is each valve operation normal and is the return spring normal? (See 05–17–32 CONTROL VALVE BODY REMOVAL [FN4A-EL].) (See 05–17–33 CONTROL VALVE BODY INSTALLATION [FN4A-EL].) (See ATX Workshop Manual FN4A-EL.)	Yes	Replace the automatic transaxle, then go to the next step (See 05–17–26 AUTOMATIC TRANSAXLE REMOVAL/ INSTALLATION [FN4A-EL].) (See ATX Workshop Manual FN4A-EL.)
		No	Repair or replace the shift valve and return spring, then go to the next step. (See 05–17–32 CONTROL VALVE BODY REMOVAL [FN4A-EL].) (See 05–17–33 CONTROL VALVE BODY INSTALLATION [FN4A-EL].) (See ATX Workshop Manual FN4A-EL.)
6	**VERIFY TROUBLESHOOTING OF DTC P0741 COMPLETED** • Make sure to reconnect all the disconnected connectors. • Clear the DTC from the memory using the WDS or equivalent. • Start the engine. • Warm up engine and ATX. • Drive the vehicle under the following conditions for **5 s or more**. — ATF temperature: **20 °C {68 °F} or more** — Drive in the D range, 4GR (TCC operation) — Vehicle speed (VSS PID): **within 60—100 km/h {37—62 mph}** • Are any DTCs present?	Yes	Replace the PCM, then go to the next step. (See 01–40A–5 PCM REMOVAL/INSTALLATION [L8, LF].)
		No	Go to the next step.
7	**VERIFY AFTER REPAIR PROCEDURE** • Perform the “After Repair Procedure”. (See 05–02–4 AFTER REPAIR PROCEDURE [FN4A-EL].) • Are any DTCs present?	Yes	Go to the applicable DTC inspection.
		No	DTC troubleshooting completed.

DTC P0742 [FN4A-EL]

DPE050200000W19

DTC P0742	Torque converter clutch (TCC) stuck on
DETECTION CONDITION	• All of the following conditions are satisfied under each of the following throttle conditions. — ATF temperature **20 °C {68 °F} or more** — Driving in 4GR at D or M range — Engine running — Turbine speed **within 225—4,987 rpm** — Vehicle speed **70 km/h {43 mph} or less** — Torque converter clutch (TCC) not operating — Difference between engine speed and turbine speed **50 rpm or less** — DTC P0734 not output • Throttle conditions — Throttle opening angle (TP PID) is **10% or more** and **5 s or more** have passed. — Throttle opening angle (TP PID) is **within 3—10%** and **3 s or more** have passed. — Throttle opening angle is at closed throttle position and **5 s or more** have passed. **Diagnostic support note:** • This is a continuous monitor (CCM). • The MIL does not illuminate if PCM detects the above malfunction conditions during first the drive cycle. • A PENDING CODE is not available. • FREEZE FRAME DATA is not available. • The AT warning light illuminates. • The DTC is stored in the PCM memory.
POSSIBLE CAUSE	• ATF level low • Deteriorated ATF • Shift solenoids A, B, C, D, E, and pressure control solenoid stuck • Line pressure low • 2-4 brake band slipping • 3-4 clutch slipping • Control valve stuck • PCM malfunction

Diagnostic procedure

STEP	INSPECTION		ACTION
1	**VERIFY RELATED REPAIR INFORMATION AVAILABILITY** • Verify related Service Bulletins and/or on-line repair information availability. • Is any related repair information available?	Yes	Perform repair or diagnosis according to the available repair information. • If the vehicle is not repaired, go to the next step.
		No	Go to the next step.
2	**INSPECT ATF CONDITION** • Turn the ignition switch to the LOCK position. • Inspect the ATF condition. — Clear red: Normal — Milky: Water mixed in fluid — Reddish brown: Deteriorated ATF • Is it normal? (See 05–17–7 Automatic Transaxle Fluid (ATF) Condition Inspection.)	Yes	Go to the next step.
		No	If the ATF color is milky or reddish brown, replace ATF, then go to Step 4. (See 05–17–9 AUTOMATIC TRANSAXLE FLUID (ATF) REPLACEMENT [FN4A-EL].)
3	**INSPECT ATF LEVEL** • Start the engine. • Warm up the ATX. • Is the ATF level within the specification? (See 05–17–8 Automatic Transaxle Fluid (ATF) Level Inspection.)	Yes	Go to the next step.
		No	Add ATF to the specified level, then go to Step 6. (See 05–17–8 Automatic Transaxle Fluid (ATF) Level Inspection.)
4	**INSPECT LINE PRESSURE** • Start the engine. • Measure the line pressure. **Specification** **Idle: 330—470 kPa {3.4—4.7 kgf/cm^2, 48—68 psi}** **Stall: 1,160—1,320 kPa {11.8—13.5 kgf/cm^2, 168—191 psi}** • Are the line pressures within the specifications? (See 05–17–3 Line Pressure Test.)	Yes	Go to the next step.
		No	• All ranges: Replace the oil pump or control valve body, then go to Step 6. • Any ranges: Replace the automatic transaxle, then go to Step 6. (See 05–17–26 AUTOMATIC TRANSAXLE REMOVAL/ INSTALLATION [FN4A-EL].) (See ATX Workshop Manual FN4A-EL.)
5	**INSPECT OPERATION OF EACH VALVE AND EACH SPRING** • Turn the ignition switch to the LOCK position. • Remove the control valve body. • Disassemble the control valve body. • Is each valve operation normal and is the return spring normal? (See 05–17–32 CONTROL VALVE BODY REMOVAL [FN4A-EL].) (See 05–17–33 CONTROL VALVE BODY INSTALLATION [FN4A-EL].) (See ATX Workshop Manual FN4A-EL.)	Yes	Replace the automatic transaxle, then go to the next step. (See 05–17–26 AUTOMATIC TRANSAXLE REMOVAL/ INSTALLATION [FN4A-EL].) (See ATX Workshop Manual FN4A-EL.)
		No	Repair or replace the shift valve and return spring, then go to the next step. (See 05–17–32 CONTROL VALVE BODY REMOVAL [FN4A-EL].) (See 05–17–33 CONTROL VALVE BODY INSTALLATION [FN4A-EL].) (See ATX Workshop Manual FN4A-EL.)
6	**VERIFY TROUBLESHOOTING OF DTC P0742 COMPLETED** • Make sure to reconnect all the disconnected connectors. • Clear the DTC from the memory using the WDS or equivalent. • Start the engine. • Warm up engine and ATX. • Drive the vehicle under the following conditions: — ATF temperature: **20 °C {68 °F} or more** — Drive in the D range, 4GR (TCC not in operation) — Vehicle speed: **70 km/h {43 mph} or less**. • Throttle conditions — Throttle opening angle (TP PID) **10% or more** and **5 s or more** have passed. — Throttle opening angle (TP PID) **within 3—10%** and **3 s or more** have passed. — Throttle opening angle at closed throttle position and **5 s or more** have passed. • Are any DTCs present?	Yes	Replace the PCM, then go to the next step. (See 01–40A–5 PCM REMOVAL/INSTALLATION [L8, LF].)
		No	Go to the next step.

STEP	INSPECTION		ACTION
7	**VERIFY AFTER REPAIR PROCEDURE** • Perform the “After Repair Procedure”. (See 05–02–4 AFTER REPAIR PROCEDURE [FN4A-EL].) • Are any DTCs present?	Yes	Go to the applicable DTC inspection.
		No	DTC troubleshooting completed.

DTC P0745 [FN4A-EL]

DPE050200000W20

DTC P0745	Pressure control solenoid malfunction
DETECTION CONDITION	• If the PCM detects either of the following conditions, the PCM determines that pressure control solenoid circuit has a malfunction. — Pressure control solenoid voltage stuck **0 V** after engine start — Pressure control solenoid voltage stuck **B+** after engine start **Diagnostic support note:** • This is a continuous monitor (CCM). • The MIL does not illuminate if PCM detects above malfunction conditions during the first drive cycle. • A PENDING CODE is not available. • FREEZE FRAME DATA is not available. • The AT warning light illuminates. • The DTC is stored in the PCM memory.
POSSIBLE CAUSE	• Pressure control solenoid malfunction • Open circuit in wiring harness between pressure control solenoid terminal B and ATX terminal I • Open circuit in wiring harness between ATX terminal I and PCM terminal 1H • Short to ground in wiring harness between ATX terminal D and PCM terminal 1G • Short to power supply in wiring harness between ATX terminal D and PCM terminal 1G • Open circuit in wiring harness between pressure control solenoid terminal A and ATX terminal D • Open circuit in wiring harness between ATX terminal D and PCM terminal 1G • Damaged connector between pressure control solenoid and PCM • PCM malfunction

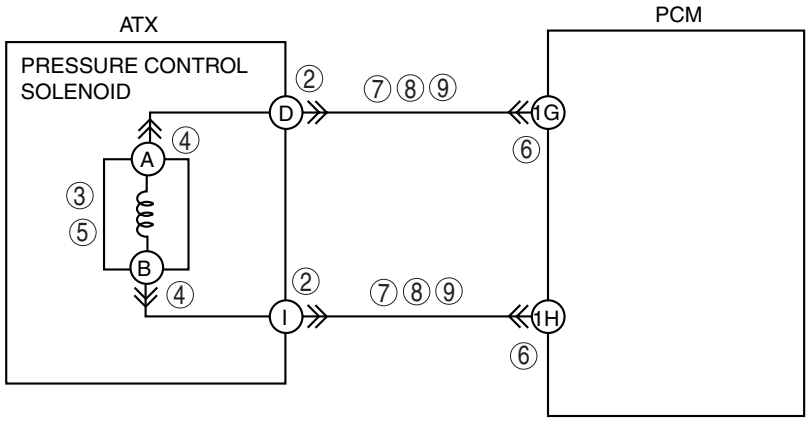

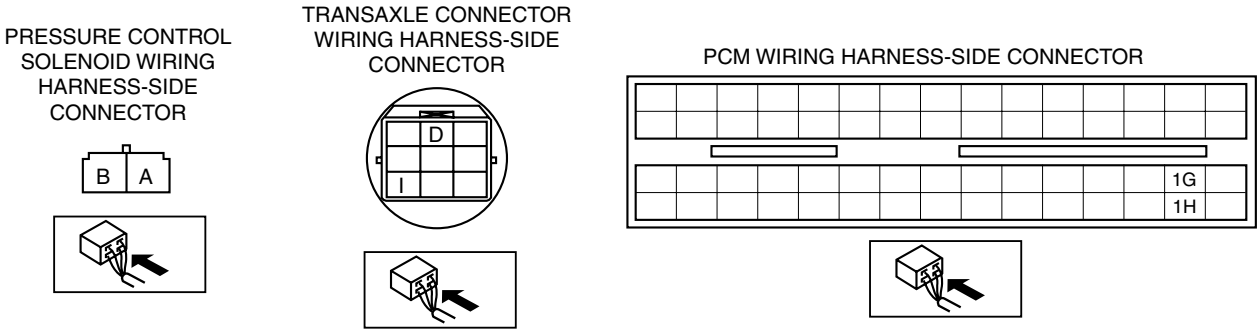

Diagnostic procedure

STEP	INSPECTION		ACTION
1	**VERIFY RELATED REPAIR INFORMATION AVAILABILITY** • Verify related Service Bulletins and/or on-line repair information availability. • Is any related repair information available?	Yes	Perform repair or diagnosis according to the available repair information. • If the vehicle is not repaired, go to the next step.
		No	Go to the next step.
2	**INSPECT ATX CONNECTOR FOR POOR CONNECTION** • Turn the ignition switch to the LOCK position. • Disconnect the ATX connector. • Inspect for poor connection (such as damaged/ pulled-out pins, corrosion). • Is the connection normal?	Yes	Go to the next step.
		No	Repair or replace the connector and/or terminals, then go to Step 10.
3	**INSPECT RESISTANCE** • Inspect the resistance between ATX terminals D and I (transaxle case side). • Is the resistance **within 2.4—7.3 ohms**? (See 05–17–23 Resistance Inspection (On-Vehicle Inspection).)	Yes	Go to Step 6.
		No	Go to the next step.
4	**INSPECT PRESSURE CONTROL SOLENOID CONNECTOR FOR POOR CONNECTION** • Disconnect the pressure control solenoid connector. • Inspect for poor connection (such as damaged/ pulled-out pins, corrosion). • Is the connection normal?	Yes	Go to the next step.
		No	Repair or replace the connector and/or terminals, then go to Step 10.
5	**INSPECT RESISTANCE** • Inspect the resistance between the pressure control solenoid terminals A and B. • Is the resistance **within 2.4—7.3 ohms**? (See 05–17–24 Resistance Inspection (Off-Vehicle Inspection).)	Yes	Replace the solenoid wiring harness, then go to Step 10.
		No	Verify pressure control solenoid installation. • If solenoid installed correctly, replace the pressure control solenoid, then go to Step 10. (See 05–17–25 SOLENOID VALVE REMOVAL/ INSTALLATION [FN4A-EL].)
6	**INSPECT PCM CONNECTOR FOR POOR CONNECTION** • Disconnect the PCM connector. • Inspect for poor connection (such as damaged/ pulled-out pins, corrosion). • Is the connection normal?	Yes	Go to the next step.
		No	Repair or replace the connector and/or terminals, then go to Step 10.
7	**INSPECT ATX CONNECTOR CIRCUIT FOR OPEN CIRCUIT** • Inspect for continuity between the PCM (wiring harness-side) and ATX connector (wiring harness-side). — PCM terminal 1G and ATX terminal D — PCM terminal 1H and ATX terminal I • Is there continuity between terminals?	Yes	Go to the next step.
		No	Repair or replace the wiring harness, the go to Step 10.
8	**INSPECT ATX CONNECTOR CIRCUIT FOR SHORT TO POWER SUPPLY** • Turn the ignition switch to the ON position (engine off). • Inspect the voltage at ATX terminal D (wiring harness-side). • Is the voltage **0 V**?	Yes	Go to the next step.
		No	Repair or replace the wiring harness, then go to Step 10.
9	**INSPECT PCM CIRCUIT FOR SHORT TO GROUND** • Turn the ignition switch to the LOCK position. • Inspect for continuity between ATX terminal D (wiring harness-side) and body ground. • Is there continuity?	Yes	Repair or replace the wiring harness, then go to the next step.
		No	Go to the next step.

STEP	INSPECTION		ACTION
10	**VERIFY TROUBLESHOOTING OF DTC P0745 COMPLETED** • Make sure to reconnect all the disconnected connectors. • Clear the DTC from the memory using the WDS or equivalent. • Make sure to wait **more than 1 s** after turning the ignition switch to the ON position. • Are any DTCs present?	Yes	Replace the PCM, then go to the next step. (See 01–40A–5 PCM REMOVAL/INSTALLATION [L8, LF].)
		No	No concern is detected. Go to the next step.
11	**VERIFY AFTER REPAIR PROCEDURE** • Perform the “After Repair Procedure”. (See 05–02–4 AFTER REPAIR PROCEDURE [FN4A-EL].) • Are any DTCs present?	Yes	Go to the applicable DTC inspection.
		No	DTC troubleshooting completed.

DTC P0751 [FN4A-EL]

DPE050200000W21

DTC P0751	Shift solenoid A stuck off
DETECTION CONDITION	• When P0731, P0732, and P0733 are not output, and all conditions below are satisfied. — ATF temperature **20 °C {68 °F} or more** — Driving in 4GR at D or M range — Engine running — Vehicle speed **29 km/h {18 mph} or more** — Turbine speed **within 225— 4,987 rpm** — Differential gear case (output) revolution speed **35 rpm or more** — Torque converter clutch (TCC) not operating — Revolution ratio of forward clutch drum revolution to differential gear case revolution **within 0.91—1.09** — None of the following DTCs are present: P0706, P0707, P0708, P0712, P0713, P0715, P0720, P0751, P0752, P0753, P0756, P0757, P0758, P0761, P0762, P0763, P0766, P0767, P0768, P0771, P0772, P0773 **Diagnostic support note:** • This is a continuous monitor (CCM). • The MIL illuminates if the PCM detects the above malfunction condition in two consecutive drive cycles or in one drive cycle while the DTC for the same malfunction has been stored in the PCM. • The PENDING CODE is available if the PCM detects the above malfunction condition during the first drive cycle. • FREEZE FRAME DATA is available. • The AT warning light illuminates. • The DTC is stored in the PCM memory.
POSSIBLE CAUSE	• ATF level low • Deteriorated ATF • Shift solenoid A stuck • Control valve stuck • PCM malfunction

Diagnostic procedure

STEP	INSPECTION		ACTION
1	**VERIFY FREEZE FRAME DATA HAS BEEN RECORDED** • Has the FREEZE FRAME DATA been recorded?	Yes	Go to the next step.
		No	Record the FREEZE FRAME DATA on the repair order, then go to the next step.
2	**VERIFY RELATED REPAIR INFORMATION AVAILABILITY** • Verify related Service Bulletins and/or on-line repair information availability. • Is any related repair information available?	Yes	Perform repair or diagnosis according to the available repair information. • If the vehicle is not repaired, go to the next step.
		No	Go to the next step.
3	**INSPECT ATF CONDITION** • Turn the ignition switch to the LOCK position. • Inspect the ATF condition. — Clear red: Normal — Milky: Water mixed in fluid — Reddish brown: Deteriorated ATF • Is it normal? (See 05–17–7 Automatic Transaxle Fluid (ATF) Condition Inspection.)	Yes	Go to the next step.
		No	If the ATF color is milky or reddish brown, replace ATF, then go to Step 5. (See 05–17–9 AUTOMATIC TRANSAXLE FLUID (ATF) REPLACEMENT [FN4A-EL].)
4	**INSPECT ATF LEVEL** • Start the engine. • Warm up the ATX. • Is the ATF level within the specification? (See 05–17–8 Automatic Transaxle Fluid (ATF) Level Inspection.)	Yes	Go to the next step.
		No	Add ATF to the specified level, then go to Step 7. (See 05–17–8 Automatic Transaxle Fluid (ATF) Level Inspection.)
5	**INSPECT LINE PRESSURE** • Start the engine. • Measure the line pressure. **Specification** **Idle: 330—470 kPa {3.4—4.7 kgf/cm^2, 48—68 psi}** **Stall: 1,160—1,320 kPa {11.8—13.5 kgf/cm^2, 168—191 psi}** • Are the line pressures within the specifications? (See 05–17–3 Line Pressure Test.)	Yes	Go to the next step.
		No	• All ranges: Replace the oil pump or control valve body, then go to Step 7. • Any ranges: Replace the automatic transaxle, then go to Step 7. (See 05–17–26 AUTOMATIC TRANSAXLE REMOVAL/ INSTALLATION [FN4A-EL].) (See ATX Workshop Manual FN4A-EL.)
6	**INSPECT OPERATION OF EACH VALVE AND EACH SPRING** • Turn the ignition switch to the LOCK position. • Remove the control valve body. • Disassemble the control valve body. • Is each valve operation normal and is the return spring normal? (See 05–17–32 CONTROL VALVE BODY REMOVAL [FN4A-EL].) (See 05–17–33 CONTROL VALVE BODY INSTALLATION [FN4A-EL].) (See ATX Workshop Manual FN4A-EL.)	Yes	Replace the automatic transaxle, then go to the next step. (See 05–17–26 AUTOMATIC TRANSAXLE REMOVAL/ INSTALLATION [FN4A-EL].) (See ATX Workshop Manual FN4A-EL.)
		No	Repair or replace the shift valve and return spring, then go to the next step. (See 05–17–32 CONTROL VALVE BODY REMOVAL [FN4A-EL].) (See 05–17–33 CONTROL VALVE BODY INSTALLATION [FN4A-EL].) (See ATX Workshop Manual FN4A-EL.)
7	**VERIFY TROUBLESHOOTING OF DTC P0751 COMPLETED** • Make sure to reconnect all the disconnected connectors. • Clear the DTC from the memory using the WDS or equivalent. • Start the engine. • Warm up the ATX. • Drive the vehicle under the following conditions and make sure that gears shift smoothly from 1GR to 4GR. — ATF temperature: **20 °C {68 °F} or more** — Drive in the D range • Is the PENDING CODE present?	Yes	Replace the PCM, then go to the next step. (See 01–40A–5 PCM REMOVAL/INSTALLATION [L8, LF].)
		No	Go to the next step.
8	**VERIFY AFTER REPAIR PROCEDURE** • Perform the “After Repair Procedure”. (See 05–02–4 AFTER REPAIR PROCEDURE [FN4A-EL].) • Are any DTCs present?	Yes	Go to the applicable DTC inspection.
		No	DTC troubleshooting completed.

DTC P0752 [FN4A-EL]

DPE050200000W22

DTC P0752	Shift solenoid A stuck on
DETECTION CONDITION	• When P0734 is not output, and all conditions below are satisfied in 1GR and 2GR. — ATF temperature **20 °C {68 °F} or more** — Engine running — D range selected — Brake pedal depressed — Throttle opening angle at closed throttle position — Vehicle speed **0 km/h {0 mph}** — Input/turbine speed sensor signal **187.5 rpm or more**. — None of the following DTCs are present: P0706, P0707, P0708, P0712, P0713, P0715, P0720, P0751, P0752, P0753, P0756, P0757, P0758, P0761, P0762, P0763, P0766, P0767, P0768, P0771, P0772, P0773 **Diagnostic support note:** • This is a continuous monitor (CCM). • The MIL illuminates if the PCM detects the above malfunction condition in two consecutive drive cycles or in one drive cycle while the DTC for the same malfunction has been stored in the PCM. • The PENDING CODE is available if the PCM detects the above malfunction condition during the first drive cycle. • FREEZE FRAME DATA is available. • The AT warning light illuminates. • The DTC is stored in the PCM memory.
POSSIBLE CAUSE	• ATF level low • Deteriorated ATF • Shift solenoid A stuck • Control valve stuck • PCM malfunction

Diagnostic procedure

STEP	INSPECTION		ACTION
1	**VERIFY FREEZE FRAME DATA HAS BEEN RECORDED** • Has the FREEZE FRAME DATA been recorded?	Yes	Go to the next step.
		No	Record the FREEZE FRAME DATA on the repair order, then go to the next step.
2	**VERIFY RELATED REPAIR INFORMATION AVAILABILITY** • Verify related Service Bulletins and/or on-line repair information availability. • Is any related repair information available?	Yes	Perform repair or diagnosis according to the available repair information. • If the vehicle is not repaired, go to the next step.
		No	Go to the next step.
3	**INSPECT ATF CONDITION** • Turn the ignition switch to the LOCK position. • Inspect the ATF condition. — Clear red: Normal — Milky: Water mixed in fluid — Reddish brown: Deteriorated ATF • Is it normal? (See 05–17–7 Automatic Transaxle Fluid (ATF) Condition Inspection.)	Yes	Go to the next step.
		No	If the ATF color is milky or reddish brown, replace ATF, then go to Step 5. (See 05–17–9 AUTOMATIC TRANSAXLE FLUID (ATF) REPLACEMENT [FN4A-EL].)
4	**INSPECT ATF LEVEL** • Start the engine. • Warm up the ATX. • Is the ATF level within the specification? (See 05–17–8 Automatic Transaxle Fluid (ATF) Level Inspection.)	Yes	Go to the next step.
		No	Add ATF to the specified level, then go to Step 7. (See 05–17–8 Automatic Transaxle Fluid (ATF) Level Inspection.)
5	**INSPECT LINE PRESSURE** • Start the engine. • Measure the line pressure. **Specification** **Idle: 330—470 kPa {3.4—4.7 kgf/cm^2, 48—68 psi}** **Stall: 1,160—1,320 kPa {11.8—13.5 kgf/cm^2, 168—191 psi}** • Are the line pressures within the specifications? (See 05–17–3 Line Pressure Test.)	Yes	Go to the next step.
		No	• All ranges: Replace the oil pump or control valve body, then go to Step 7. • Any ranges: Replace the automatic transaxle, then go to Step 7. (See 05–17–26 AUTOMATIC TRANSAXLE REMOVAL/ INSTALLATION [FN4A-EL].) (See ATX Workshop Manual FN4A-EL.)
6	**INSPECT OPERATION OF EACH VALVE AND EACH SPRING** • Turn the ignition switch to the LOCK position. • Remove the control valve body. • Disassemble the control valve body. • Is each valve operation normal and is the return spring normal? (See 05–17–32 CONTROL VALVE BODY REMOVAL [FN4A-EL].) (See 05–17–33 CONTROL VALVE BODY INSTALLATION [FN4A-EL].) (See ATX Workshop Manual FN4A-EL.)	Yes	Replace the automatic transaxle, then go to the next step. (See 05–17–26 AUTOMATIC TRANSAXLE REMOVAL/ INSTALLATION [FN4A-EL].) (See ATX Workshop Manual FN4A-EL.)
		No	Repair or replace the shift valve and return spring, then go to the next step. (See 05–17–32 CONTROL VALVE BODY REMOVAL [FN4A-EL].) (See 05–17–33 CONTROL VALVE BODY INSTALLATION [FN4A-EL].) (See ATX Workshop Manual FN4A-EL.)
7	**VERIFY TROUBLESHOOTING OF DTC P0752 COMPLETED** • Make sure to reconnect all the disconnected connectors. • Clear the DTC from the memory using the WDS or equivalent. • Start the engine. • Warm up the ATX. • Drive the vehicle under the following conditions and make sure that gears shift smoothly from 1GR to 4GR: — ATF temperature: **20 °C {68 °F} or more** — Drive in the D range • Is the PENDING CODE present?	Yes	Replace the PCM, then go to the next step. (See 01–40A–5 PCM REMOVAL/INSTALLATION [L8, LF].)
		No	Go to the next step.
8	**VERIFY AFTER REPAIR PROCEDURE** • Perform the “After Repair Procedure”. (See 05–02–4 AFTER REPAIR PROCEDURE [FN4A-EL].) • Are any DTCs present?	Yes	Go to the applicable DTC inspection.
		No	DTC troubleshooting completed.

DTC P0753 [FN4A-EL]

DPE050200000W23

DTC P0753	Shift solenoid A malfunction (electrical)
DETECTION CONDITION	• If PCM detects either of the following conditions, PCM determines that shift solenoid A circuit has a malfunction. — Shift solenoid A voltage stuck at **B+** after engine start — Shift solenoid A voltage stuck at **0 V** after engine start **Diagnostic support note:** • This is a continuous monitor (CCM). • The MIL illuminates if the PCM detects the above malfunction conditions during the first drive cycle. • A PENDING CODE is not available. • FREEZE FRAME DATA is available. • The AT warning light illuminates. • The DTC is stored in the PCM memory.
POSSIBLE CAUSE	• Shift solenoid A malfunction • Short to ground in wiring harness between ATX terminal A and PCM terminal 1B • Short to power supply in wiring harness between ATX terminal A and PCM terminal 1B • Open circuit in wiring harness between shift solenoid A terminal B and ATX terminal A • Open circuit in wiring harness between ATX terminal A and PCM terminal 1B • Open circuit in wiring harness between shift solenoid A terminal A and body ground • Damaged connector between shift solenoid A and PCM • PCM malfunction

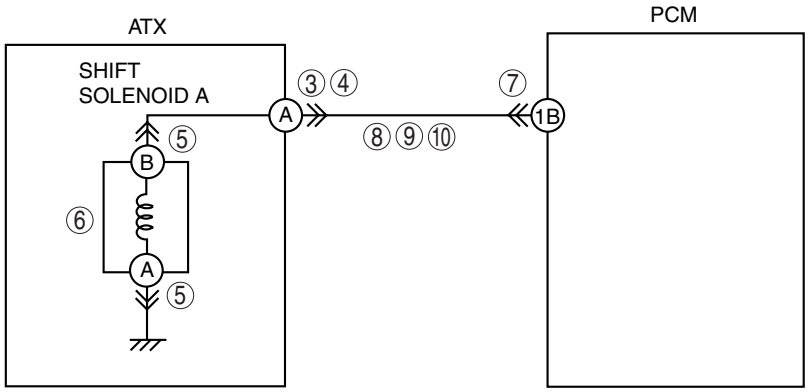

SHIFT SOLENOID A WIRING HARNESS-SIDE CONNECTOR

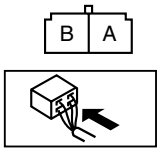

TRANSAXLE CONNECTOR WIRING HARNESS-SIDE CONNECTOR

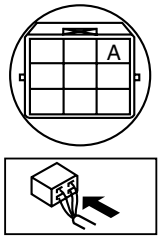

PCM WIRING HARNESS-SIDE CONNECTOR

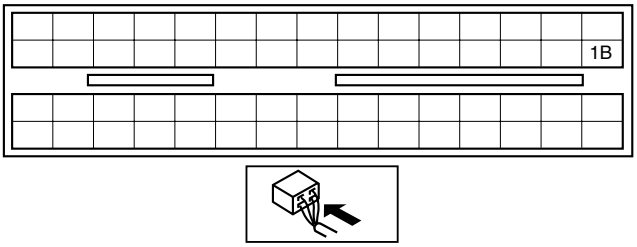

Diagnostic procedure

STEP	INSPECTION		ACTION
1	**VERIFY FREEZE FRAME DATA HAS BEEN RECORDED** • Has the FREEZE FRAME DATA been recorded?	Yes	Go to the next step.
		No	Record the FREEZE FRAME DATA on the repair order, then go to the next step.
2	**VERIFY RELATED REPAIR INFORMATION AVAILABILITY** • Verify related Service Bulletins and/or on-line repair information availability. • Is any related repair information available?	Yes	Perform repair or diagnosis according to the available repair information. • If the vehicle is not repaired, go to the next step.
		No	Go to the next step.
3	**INSPECT ATX CONNECTOR FOR POOR CONNECTION** • Turn the ignition switch to the LOCK position. • Disconnect the ATX connector. • Inspect for poor connection (such as damaged/ pulled-out pins, corrosion). • Is the connection normal?	Yes	Go to the next step.
		No	Repair or replace the connector and/or terminals, then go to Step 11.
4	**INSPECT RESISTANCE** • Inspect the resistance between ATX terminal A (transaxle case side) and body ground. • Is the resistance **within 1.0—4.2 ohms**? (See 05–17–23 Resistance Inspection (On-Vehicle Inspection).)	Yes	Go to Step 7.
		No	Go to the next step.
5	**INSPECT SHIFT SOLENOID A CONNECTOR FOR POOR CONNECTION** • Disconnect the shift solenoid A connector. • Inspect for poor connection (such as damaged/ pulled-out pins, corrosion). • Is the connection normal?	Yes	Go to the next step.
		No	Repair or replace the connector and/or terminals, then go to Step 11.
6	**INSPECT RESISTANCE** • Inspect the resistance between shift solenoid A terminals A and B (part-side). • Is the resistance **within 1.0—4.2 ohms**? (See 05–17–24 Resistance Inspection (Off-Vehicle Inspection).)	Yes	Replace the solenoid wiring harness, then go to Step 11.
		No	Verify shift solenoid A installation. • If solenoid installed correctly, replace the solenoid, then go to Step 11. (See 05–17–25 SOLENOID VALVE REMOVAL/ INSTALLATION [FN4A-EL].)
7	**INSPECT PCM CONNECTOR FOR POOR CONNECTION** • Disconnect the PCM connector. • Inspect for poor connection (such as damaged/ pulled-out pins, corrosion). • Is the connection normal?	Yes	Go to the next step.
		No	Repair or replace the connector and/or terminals, then go to Step 11.
8	**INSPECT ATX CONNECTOR CIRCUIT FOR OPEN CIRCUIT** • Inspect for continuity between PCM terminal 1B (wiring harness-side) and ATX terminal A (wiring harness-side). • Is there continuity between terminals?	Yes	Go to the next step.
		No	Repair or replace the wiring harness, then go to Step 11.
9	**INSPECT ATX CONNECTOR CIRCUIT FOR SHORT TO POWER SUPPLY** • Turn the ignition switch to the ON position (engine off). • Inspect the voltage at ATX terminal A (wiring harness-side). • Is the voltage **0 V**?	Yes	Go to the next step.
		No	Repair or replace the wiring harness, then go to Step 11.
10	**INSPECT PCM CIRCUIT FOR SHORT TO GROUND** • Turn the ignition switch to the LOCK position. • Inspect for continuity between PCM terminal 1B (wiring harness-side) and body ground. • Is there continuity?	Yes	Repair or replace the wiring harness, then go to Step 11.
		No	Go to the next step.

STEP	INSPECTION		ACTION
11	**VERIFY TROUBLESHOOTING OF DTC P0753 COMPLETED** • Make sure to reconnect all the disconnected connectors. • Clear the DTC from the memory using the WDS or equivalent. • Drive the vehicle in D range and make sure that the gears shift smoothly from 1GR to 4GR. • Are any DTCs present?	Yes	Replace the PCM, then go to the next step. (See 01–40A–5 PCM REMOVAL/INSTALLATION [L8, LF].)
		No	No concern is detected. Go to the next step.
12	**VERIFY AFTER REPAIR PROCEDURE** • Perform the “After Repair Procedure”. (See 05–02–4 AFTER REPAIR PROCEDURE [FN4A-EL].) • Are any DTCs present?	Yes	Go to the applicable DTC inspection.
		No	DTC troubleshooting completed.

DTC P0756 [FN4A-EL]

DPE050200000W24

DTC P0756	Shift solenoid B stuck off
DETECTION CONDITION	• When DTC P0732, P0733, and P0734 are not output, and all conditions below are satisfied. — ATF temperature **20 °C {68 °F} or more** — Driving in 1GR at D or M range — Engine running — Turbine speed **within 225—4,987 rpm** — Differential gear case (output) revolution speed **35 rpm or more** — Throttle opening angle (TP PID) **2.27 % or more** — Revolution ratio of forward clutch drum revolution to differential gear case revolution **2.185 or less** — None of the following DTCs are present: P0706, P0707, P0708, P0712, P0713, P0715, P0720, P0751, P0752, P0753, P0756, P0757, P0758, P0761, P0762, P0763, P0766, P0767, P0768, P0771, P0772, P0773 **Diagnostic support note:** • This is a continuous monitor (CCM). • The MIL illuminates if the PCM detects the above malfunction condition in two consecutive drive cycles or in one drive cycle while the DTC for the same malfunction has been stored in the PCM. • The PENDING CODE is available if the PCM detects the above malfunction condition during the first drive cycle. • FREEZE FRAME DATA is available. • The AT warning light illuminates. • The DTC is stored in the PCM memory.
POSSIBLE CAUSE	• ATF level low • Deteriorated ATF • Shift solenoid B stuck • Control valve stuck • PCM malfunction

Diagnostic procedure

STEP	INSPECTION		ACTION
1	**VERIFY FREEZE FRAME DATA HAS BEEN RECORDED** • Has the FREEZE FRAME DATA been recorded?	Yes	Go to the next step.
		No	Record the FREEZE FRAME DATA on the repair order, then go to the next step.
2	**VERIFY RELATED REPAIR INFORMATION AVAILABILITY** • Verify related Service Bulletins and/or on-line repair information availability. • Is any related repair information available?	Yes	Perform repair or diagnosis according to the available repair information. • If the vehicle is not repaired, go to the next step.
		No	Go to the next step.
3	**INSPECT ATF CONDITION** • Turn the ignition switch to the LOCK position. • Inspect the ATF condition. — Clear red: Normal — Milky: Water mixed in fluid — Reddish brown: Deteriorated ATF • Is it normal? (See 05–17–7 Automatic Transaxle Fluid (ATF) Condition Inspection.)	Yes	Go to the next step.
		No	If the ATF color is milky or reddish brown, replace ATF, then go to Step 5. (See 05–17–9 AUTOMATIC TRANSAXLE FLUID (ATF) REPLACEMENT [FN4A-EL].)
4	**INSPECT ATF LEVEL** • Start the engine. • Warm up the ATX. • Is the ATF level within the specification? (See 05–17–8 Automatic Transaxle Fluid (ATF) Level Inspection.)	Yes	Go to the next step.
		No	Add ATF to the specified level, then go to Step 7. (See 05–17–8 Automatic Transaxle Fluid (ATF) Level Inspection.)
5	**INSPECT LINE PRESSURE** • Start the engine. • Measure the line pressure. **Specification** **Idle: 330—470 kPa {3.4—4.7 kgf/cm^2, 48—68 psi}** **Stall: 1,160—1,320 kPa {11.8—13.5 kgf/cm^2, 168—191 psi}** • Are the line pressures within the specifications? (See 05–17–3 Line Pressure Test.)	Yes	Go to the next step.
		No	• All ranges: Replace the oil pump or control valve body, then go to Step 7. • Any ranges: Replace the automatic transaxle, then go to Step 7. (See 05–17–26 AUTOMATIC TRANSAXLE REMOVAL/ INSTALLATION [FN4A-EL].) (See ATX Workshop Manual FN4A-EL.)
6	**INSPECT OPERATION OF EACH VALVE AND EACH SPRING** • Turn the ignition switch to the LOCK position. • Remove the control valve body. • Disassemble the control valve body. • Is each valve operation normal and is the return spring normal? (See 05–17–32 CONTROL VALVE BODY REMOVAL [FN4A-EL].) (See 05–17–33 CONTROL VALVE BODY INSTALLATION [FN4A-EL].) (See ATX Workshop Manual FN4A-EL.)	Yes	Replace the automatic transaxle, then go to the next step. (See 05–17–26 AUTOMATIC TRANSAXLE REMOVAL/ INSTALLATION [FN4A-EL].) (See ATX Workshop Manual FN4A-EL.)
		No	Repair or replace the shift valve and return spring, then go to the next step. (See 05–17–32 CONTROL VALVE BODY REMOVAL [FN4A-EL].) (See 05–17–33 CONTROL VALVE BODY INSTALLATION [FN4A-EL].) (See ATX Workshop Manual FN4A-EL.)
7	**VERIFY TROUBLESHOOTING OF DTC P0756 COMPLETED** • Make sure to reconnect all the disconnected connectors. • Clear the DTC from the memory using the WDS or equivalent. • Start the engine. • Warm up the ATX. • Drive the vehicle under the following conditions and make sure that gears shift smoothly from 1GR to 4GR: — ATF temperature: **20 °C {68 °F} or more** — Drive in the D range — Engine speed (RPM PID): **450 rpm or more** — Throttle opening angle (TP PID): **2.27 % or more** • Is the PENDING CODE present?	Yes	Replace the PCM, then go to the next step. (See 01–40A–5 PCM REMOVAL/INSTALLATION [L8, LF].)
		No	Go to the next step.

STEP	INSPECTION		ACTION
8	**VERIFY AFTER REPAIR PROCEDURE** • Perform the “After Repair Procedure”. (See 05–02–4 AFTER REPAIR PROCEDURE [FN4A-EL].) • Are any DTCs present?	Yes	Go to the applicable DTC inspection.
		No	DTC troubleshooting completed.

DTC P0757 [FN4A-EL]

DPE050200000W25

DTC P0757	Shift solenoid B stuck on
DETECTION CONDITION	• When DTC P0731 and P0733 are not output, and both the following conditions are satisfied. — When all conditions below are satisfied while driving in 2GR • ATF temperature **20 °C {68 °F} or more** • Driving in D or M range • Engine running • Turbine speed **within 225—4,987 rpm** • Differential gear case (output) revolution speed **35 rpm or more** • Revolution ratio of forward clutch drum revolution to differential gear case revolution **1.277 or less** or **2.185 or more** • None of the following DTCs are present: P0706, P0707, P0708, P0712, P0713, P0715, P0720, P0751, P0752, P0753, P0756, P0757, P0758, P0761, P0762, P0763, P0766, P0767, P0768, P0771, P0772, P0773 — When all conditions below are satisfied with driving in 4GR • ATF temperature **20 °C {68 °F} or more** • Driving in D or M range • Engine running • Turbine speed **within 225—4,987 rpm** • Differential gear case (output) revolution speed **35 rpm or more** • Vehicle speed **29 km/h {18 mph}** • Throttle opening angle at closed throttle position • Revolution ratio of forward clutch drum revolution to differential gear case revolution **0.6 or less** or **1.277 or more** • None of the following DTCs are present: P0706, P0707, P0708, P0712, P0713, P0715, P0720, P0751, P0752, P0753, P0756, P0757, P0758, P0761, P0762, P0763, P0766, P0767, P0768, P0771, P0772, P0773 **Diagnostic support note:** • This is a continuous monitor (CCM). • The MIL illuminates if the PCM detects the above malfunction condition in two consecutive drive cycles or in one drive cycle while the DTC for the same malfunction has been stored in the PCM. • The PENDING CODE is available if the PCM detects the above malfunction condition during the first drive cycle. • FREEZE FRAME DATA is available. • The AT warning light illuminates. • The DTC is stored in the PCM memory.
POSSIBLE CAUSE	• ATF level low • Deteriorated ATF • Shift solenoid B stuck • Control valve stuck • PCM malfunction

Diagnostic procedure

STEP	INSPECTION		ACTION
1	**VERIFY FREEZE FRAME DATA HAS BEEN RECORDED** • Has the FREEZE FRAME DATA been recorded?	Yes	Go to the next step.
		No	Record the FREEZE FRAME DATA on the repair order, then go to the next step.
2	**VERIFY RELATED REPAIR INFORMATION AVAILABILITY** • Verify related Service Bulletins and/or on-line repair information availability. • Is any related repair information available?	Yes	Perform repair or diagnosis according to the available repair information. • If the vehicle is not repaired, go to the next step.
		No	Go to the next step.
3	**INSPECT ATF CONDITION** • Turn the ignition switch to the LOCK position. • Inspect the ATF condition. — Clear red: Normal — Milky: Water mixed in fluid — Reddish brown: Deteriorated ATF • Is it normal? (See 05–17–7 Automatic Transaxle Fluid (ATF) Condition Inspection.)	Yes	Go to the next step.
		No	If the ATF color is milky or reddish brown, replace ATF, then go to Step 5. (See 05–17–9 AUTOMATIC TRANSAXLE FLUID (ATF) REPLACEMENT [FN4A-EL].)
4	**INSPECT ATF LEVEL** • Start the engine. • Warm up the ATX. • Is the ATF level within the specification? (See 05–17–8 Automatic Transaxle Fluid (ATF) Level Inspection.)	Yes	Go to the next step.
		No	Add ATF to the specified level, then go to Step 7. (See 05–17–8 Automatic Transaxle Fluid (ATF) Level Inspection.)
5	**INSPECT LINE PRESSURE** • Start the engine. • Measure the line pressure. **Specification** **Idle: 330—470 kPa {3.4—4.7 kgf/cm^2, 48—68 psi}** **Stall: 1,160—1,320 kPa {11.8—13.5 kgf/cm^2, 168—191 psi}** • Are the line pressures within the specifications? (See 05–17–3 Line Pressure Test.)	Yes	Go to the next step.
		No	• All ranges: Replace the oil pump or control valve body, then go to Step 7. • Any ranges: Replace the automatic transaxle, then go to Step 7. (See 05–17–26 AUTOMATIC TRANSAXLE REMOVAL/ INSTALLATION [FN4A-EL].) (See ATX Workshop Manual FN4A-EL.)
6	**INSPECT OPERATION OF EACH VALVE AND EACH SPRING** • Turn the ignition switch to the LOCK position. • Remove the control valve body. • Disassemble the control valve body. • Is each valve operation normal and is the return spring normal? (See 05–17–32 CONTROL VALVE BODY REMOVAL [FN4A-EL].) (See 05–17–33 CONTROL VALVE BODY INSTALLATION [FN4A-EL].) (See ATX Workshop Manual FN4A-EL.)	Yes	Replace the automatic transaxle, then go to the next step. (See 05–17–26 AUTOMATIC TRANSAXLE REMOVAL/ INSTALLATION [FN4A-EL].) (See ATX Workshop Manual FN4A-EL.)
		No	Repair or replace the shift valve and return spring, then go to the next step. (See 05–17–32 CONTROL VALVE BODY REMOVAL [FN4A-EL].) (See 05–17–33 CONTROL VALVE BODY INSTALLATION [FN4A-EL].) (See ATX Workshop Manual FN4A-EL.)
7	**VERIFY TROUBLESHOOTING OF DTC P0757 COMPLETED** • Make sure to reconnect all the disconnected connectors. • Clear the DTC from the memory using the WDS or equivalent. • Start the engine. • Warm up the ATX. • Drive the vehicle under the following conditions make sure that gears shift smoothly from 1GR to 4GR. — ATF temperature: **20 °C {68 °F} or more** — Drive in the D range — Engine speed (RPM PID): **450 rpm or more** — Throttle opening angle (TP PID): **0%** (4GR only) — Vehicle speed (VSS PID): **29 km/h {18 mph}** (4GR only) • Is the PENDING CODE present?	Yes	Replace the PCM, then go to the next step. (See 01–40A–5 PCM REMOVAL/INSTALLATION [L8, LF].)
		No	Go to the next step.

STEP	INSPECTION		ACTION
8	**VERIFY AFTER REPAIR PROCEDURE** • Perform the “After Repair Procedure”. (See 05–02–4 AFTER REPAIR PROCEDURE [FN4A-EL].) • Are any DTCs present?	Yes	Go to the applicable DTC inspection.
		No	DTC troubleshooting completed.

DTC P0758 [FN4A-EL]

DPE050200000W26

DTC P0758	Shift solenoid B malfunction (electrical)
DETECTION CONDITION	• If the PCM detects either of the following conditions, the PCM determines that shift solenoid B circuit has a malfunction. — Shift solenoid B voltage stuck at **B+** after engine start — Shift solenoid B voltage stuck at **0 V** after engine start **Diagnostic support note:** • This is a continuous monitor (CCM). • The MIL illuminates if the PCM detects the above malfunction conditions during the first drive cycle. • A PENDING CODE is not available. • FREEZE FRAME DATA is available. • The AT warning light illuminates. • The DTC is stored in the PCM memory.
POSSIBLE CAUSE	• Shift solenoid B malfunction • Short to ground in wiring harness between ATX terminal C and PCM terminal 1C • Short to power supply in wiring harness between ATX terminal C and PCM terminal 1C • Open circuit in wiring harness between shift solenoid B terminal B and ATX terminal C • Open circuit in wiring harness between ATX terminal C and PCM terminal 1C • Open circuit in wiring harness between shift solenoid B terminal A and body ground • Damaged connector between shift solenoid B and PCM • PCM malfunction

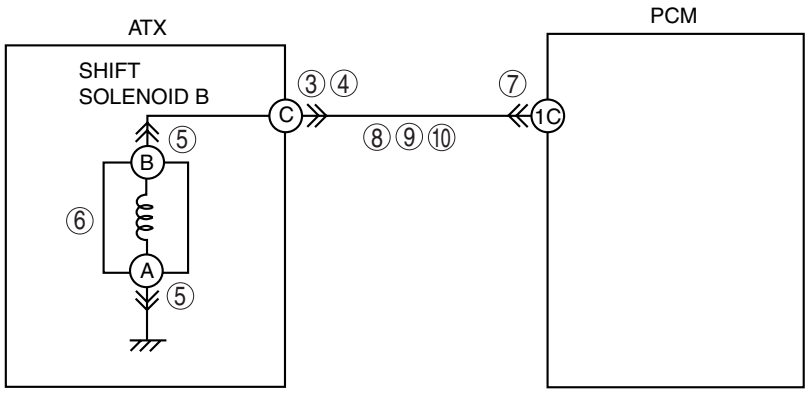

SHIFT SOLENOID B WIRING HARNESS-SIDE CONNECTOR

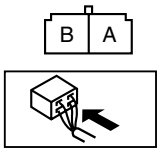

TRANSAXLE CONNECTOR WIRING HARNESS-SIDE CONNECTOR

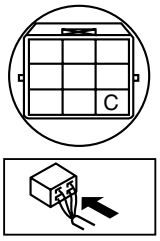

PCM WIRING HARNESS-SIDE CONNECTOR

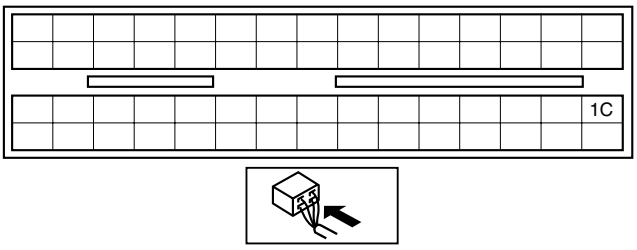

Diagnostic procedure

STEP	INSPECTION		ACTION
1	**VERIFY FREEZE FRAME DATA HAS BEEN RECORDED** • Has the FREEZE FRAME DATA been recorded?	Yes	Go to the next step.
		No	Record the FREEZE FRAME DATA on the repair order, then go to the next step.
2	**VERIFY RELATED REPAIR INFORMATION AVAILABILITY** • Verify related Service Bulletins and/or on-line repair information availability. • Is any related repair information available?	Yes	Perform repair or diagnosis according to the available repair information. • If the vehicle is not repaired, go to the next step.
		No	Go to the next step.
3	**INSPECT ATX CONNECTOR FOR POOR CONNECTION** • Turn the ignition switch to the LOCK position. • Disconnect the ATX connector. • Inspect for poor connection (such as damaged/ pulled-out pins, corrosion). • Is the connection normal?	Yes	Go to the next step.
		No	Repair or replace the connector and/or terminals, then go to Step 11.
4	**INSPECT RESISTANCE** • Inspect the resistance between ATX terminal C (transaxle case side) and body ground. • Is the resistance **within 1.0—4.2 ohms**? (See 05–17–23 Resistance Inspection (On-Vehicle Inspection).)	Yes	Go to Step 7.
		No	Go to the next step.
5	**INSPECT SHIFT SOLENOID B CONNECTOR FOR POOR CONNECTION** • Disconnect the shift solenoid B connector. • Inspect for poor connection (such as damaged/ pulled-out pins, corrosion). • Is the connection normal?	Yes	Go to the next step.
		No	Repair or replace the connector and/or terminals, then go to Step 11.
6	**INSPECT RESISTANCE** • Inspect the resistance between shift solenoid B terminals A and B (part-side). • Is the resistance **within 1.0—4.2 ohms**? (See 05–17–24 Resistance Inspection (Off-Vehicle Inspection).)	Yes	Replace the solenoid wiring harness, then go to Step 11.
		No	Verify shift solenoid B installation. • If solenoid installed correctly, replace the solenoid, then go to Step 11. (See 05–17–25 SOLENOID VALVE REMOVAL/ INSTALLATION [FN4A-EL].)
7	**INSPECT PCM CONNECTOR FOR POOR CONNECTION** • Disconnect the PCM connector. • Inspect for poor connection (such as damaged/ pulled-out pins, corrosion). • Is the connection normal?	Yes	Go to the next step.
		No	Repair or replace the connector and/or terminals, then go to Step 11.
8	**INSPECT ATX CONNECTOR CIRCUIT FOR OPEN CIRCUIT** • Inspect for continuity between PCM terminal 1C (wiring harness-side) and ATX terminal C (wiring harness-side). • Is there continuity between terminals?	Yes	Go to the next step.
		No	Repair or replace the wiring harness, then go to Step 11.
9	**INSPECT ATX CONNECTOR CIRCUIT FOR SHORT TO POWER SUPPLY** • Turn the ignition switch to the ON position (engine off). • Inspect for voltage at ATX terminal C (wiring harness-side). • Is the voltage **0 V**?	Yes	Go to the next step.
		No	Repair or replace the wiring harness, then go to Step 11.
10	**INSPECT PCM CIRCUIT FOR SHORT TO GROUND** • Turn the ignition switch to the LOCK position. • Inspect for continuity between PCM terminal 1C (wiring harness-side) and body ground. • Is there continuity?	Yes	Repair or replace the wiring harness, then go to Step 11.
		No	Go to the next step.

STEP	INSPECTION		ACTION
11	**VERIFY TROUBLESHOOTING OF DTC P0758 SHIFT SOLENOID B COMPLETED** • Make sure to reconnect all the disconnected connectors. • Clear the DTC from the memory using the WDS or equivalent. • Drive the vehicle in D range and make sure that the gears shift smoothly from 1GR to 4GR. • Are any DTCs present?	Yes	Replace the PCM, then go to the next step. (See 01–40A–5 PCM REMOVAL/INSTALLATION [L8, LF].)
		No	Go to the next step.
12	**VERIFY AFTER REPAIR PROCEDURE** • Perform the “After Repair Procedure”. (See 05–02–4 AFTER REPAIR PROCEDURE [FN4A-EL].) • Are any DTCs present?	Yes	Go to the applicable DTC inspection.
		No	DTC troubleshooting completed.

DTC P0761 [FN4A-EL]

DPE050200000W27

DTC P0761	Shift solenoid C stuck off
DETECTION CONDITION	• When DTC P0733 and P0734 are not output, and both the following conditions are satisfied. — When all conditions below are satisfied while driving in 1GR • ATF temperature **20 °C {68 °F} or more** • Driving in D or M range • Engine running • Turbine speed **within 225—4,987 rpm** • Throttle opening angle (TP PID) **2.27 % or more** • Differential gear case (output) revolution speed **35 rpm or more** • Revolution ratio of forward clutch drum revolution to differential gear case revolution **2.185 or less** • None of the following DTCs are present: P0706, P0707, P0708, P0712, P0713, P0715, P0720, P0751, P0752, P0753, P0756, P0757, P0758, P0761, P0762, P0763, P0766, P0767, P0768, P0771, P0772, P0773 — When all conditions below are satisfied while driving in 2GR • ATF temperature **20 °C {68 °F} or more** • Driving in D or M range • Engine running • Turbine speed **within 225—4,987 rpm** • Differential gear case (output) revolution speed **35 rpm or more** • Revolution ratio of forward clutch drum revolution to differential gear case revolution **1.277 or less** or **2.185 or more** • None of the following DTCs are present: P0706, P0707, P0708, P0712, P0713, P0715, P0720, P0751, P0752, P0753, P0756, P0757, P0758, P0761, P0762, P0763, P0766, P0767, P0768, P0771, P0772, P0773 **Diagnostic support note:** • This is a continuous monitor (CCM). • The MIL illuminates if the PCM detects the above malfunction condition in two consecutive drive cycles or in one drive cycle while the DTC for the same malfunction has been stored in the PCM. • The PENDING CODE is available if the PCM detects the above malfunction condition during the first drive cycle. • FREEZE FRAME DATA is available. • The AT warning light illuminates. • The DTC is stored in the PCM memory.
POSSIBLE CAUSE	• ATF level low • Deteriorated ATF • Shift solenoid C stuck • Control valve stuck • PCM malfunction

Diagnostic procedure

STEP	INSPECTION		ACTION
1	**VERIFY FREEZE FRAME DATA HAS BEEN RECORDED** • Has the FREEZE FRAME DATA been recorded?	Yes	Go to the next step.
		No	Record the FREEZE FRAME DATA on the repair order, then go to the next step.
2	**VERIFY RELATED REPAIR INFORMATION AVAILABILITY** • Verify related Service Bulletins and/or on-line repair information availability. • Is any related repair information available?	Yes	Perform repair or diagnosis according to the available repair information. • If the vehicle is not repaired, go to the next step.
		No	Go to the next step.
3	**INSPECT ATF CONDITION** • Turn the ignition switch to the LOCK position. • Inspect the ATF condition. — Clear red: Normal — Milky: Water mixed in fluid — Reddish brown: Deteriorated ATF • Is it normal? (See 05–17–7 Automatic Transaxle Fluid (ATF) Condition Inspection.)	Yes	Go to the next step.
		No	If the ATF color is milky or reddish brown, replace ATF, then go to Step 5. (See 05–17–9 AUTOMATIC TRANSAXLE FLUID (ATF) REPLACEMENT [FN4A-EL].)
4	**INSPECT ATF LEVEL** • Start the engine. • Warm up the ATX. • Is the ATF level within the specification? (See 05–17–8 Automatic Transaxle Fluid (ATF) Level Inspection.)	Yes	Go to the next step.
		No	Add ATF to the specified level, then go to Step 7. (See 05–17–8 Automatic Transaxle Fluid (ATF) Level Inspection.)
5	**INSPECT LINE PRESSURE** • Start the engine. • Measure the line pressure. **Specification** **Idle: 330—470 kPa {3.4—4.7 kgf/cm^2, 48—68 psi}** **Stall: 1,160—1,320 kPa {11.8—13.5 kgf/cm^2, 168—191 psi}** • Are the line pressures within the specifications? (See 05–17–3 Line Pressure Test.)	Yes	Go to the next step.
		No	• All ranges: Replace the oil pump or control valve body, then go to Step 7. • Any ranges: Replace the automatic transaxle, then go to Step 7. (See 05–17–26 AUTOMATIC TRANSAXLE REMOVAL/ INSTALLATION [FN4A-EL].) (See ATX Workshop Manual FN4A-EL.)
6	**INSPECT OPERATION OF EACH VALVE AND EACH SPRING** • Turn the ignition switch to the LOCK position. • Remove the control valve body. • Disassemble the control valve body. • Is each valve operation normal and is the return spring normal? (See 05–17–32 CONTROL VALVE BODY REMOVAL [FN4A-EL].) (See 05–17–33 CONTROL VALVE BODY INSTALLATION [FN4A-EL].) (See ATX Workshop Manual FN4A-EL.)	Yes	Replace the automatic transaxle, then go to the next step. (See 05–17–26 AUTOMATIC TRANSAXLE REMOVAL/ INSTALLATION [FN4A-EL].) (See ATX Workshop Manual FN4A-EL.)
		No	Repair or replace the shift valve and return spring, then go to the next step. (See 05–17–32 CONTROL VALVE BODY REMOVAL [FN4A-EL].) (See 05–17–33 CONTROL VALVE BODY INSTALLATION [FN4A-EL].) (See ATX Workshop Manual FN4A-EL.)
7	**VERIFY TROUBLESHOOTING OF DTC P0761 COMPLETED** • Make sure to reconnect all the disconnected connectors. • Clear the DTC from the memory using the WDS or equivalent. • Start the engine. • Warm up the ATX. • Drive the vehicle under the following conditions and make sure that the gears shift smoothly from 1GR to 4GR. — ATF temperature: **20 °C {68 °F} or more** — Drive in the D range — Throttle opening angle (TP PID): **2.27 % or more** • Is the PENDING CODE present?	Yes	Replace the PCM, then go to the next step. (See 01–40A–5 PCM REMOVAL/INSTALLATION [L8, LF].)
		No	Go to the next step.

STEP	INSPECTION		ACTION
8	**VERIFY AFTER REPAIR PROCEDURE** • Perform the “After Repair Procedure”. (See 05–02–4 AFTER REPAIR PROCEDURE [FN4A-EL].) • Are any DTCs present?	Yes	Go to the applicable DTC inspection.
		No	DTC troubleshooting completed.

DTC P0762 [FN4A-EL]

DPE050200000W28

DTC P0762	Shift solenoid C stuck on
DETECTION CONDITION	• When DTC P0731 and P0732 are not output, and both the following conditions are satisfied. — When all conditions below are satisfied while driving in 3GR. • ATF temperature **20 °C {68 °F} or more**. • Driving in D or M range • Engine running • Vehicle speed **18 km/h {11 mph} or more** • Turbine speed **within 225—4,987 rpm** • Torque converter clutch (TCC) not operating • Differential gear case (output) revolution speed **35 rpm or more** • Revolution ratio of forward clutch drum revolution to differential gear case revolution **within 1.404—1.704** • None of the following DTCs are present: P0706, P0707, P0708, P0712, P0713, P0715, P0720, P0751, P0752, P0753, P0756, P0757, P0758, P0761, P0762, P0763, P0766, P0767, P0768, P0771, P0772, P0773 **Diagnostic support note:** • This is a continuous monitor (CCM). • The MIL illuminates if the PCM detects the above malfunction condition in two consecutive drive cycles or in one drive cycle while the DTC for the same malfunction has been stored in the PCM. • The PENDING CODE is available if the PCM detects the above malfunction condition during the first drive cycle. • FREEZE FRAME DATA is available. • The AT warning light illuminates. • The DTC is stored in the PCM memory.
POSSIBLE CAUSE	• ATF level low • Deteriorated ATF • Shift solenoid C and pressure control solenoid stuck • Control valve stuck • PCM malfunction

Diagnostic procedure

STEP	INSPECTION		ACTION
1	**VERIFY FREEZE FRAME DATA HAS BEEN RECORDED** • Has the FREEZE FRAME DATA been recorded?	Yes	Go to the next step.
		No	Record the FREEZE FRAME DATA on the repair order, then go to the next step.
2	**VERIFY RELATED REPAIR INFORMATION AVAILABILITY** • Verify related Service Bulletins and/or on-line repair information availability. • Is any related repair information available?	Yes	Perform repair or diagnosis according to the available repair information. • If the vehicle is not repaired, go to the next step.
		No	Go to the next step.
3	**INSPECT ATF CONDITION** • Turn the ignition switch to the LOCK position. • Inspect the ATF condition. — Clear red: Normal — Milky: Water mixed in fluid — Reddish brown: Deteriorated ATF • Is it normal? (See 05–17–7 Automatic Transaxle Fluid (ATF) Condition Inspection.)	Yes	Go to the next step.
		No	If the ATF color is milky or reddish brown, replace ATF, then go to Step 5. (See 05–17–9 AUTOMATIC TRANSAXLE FLUID (ATF) REPLACEMENT [FN4A-EL].)
4	**INSPECT ATF LEVEL** • Start the engine. • Warm up the ATX. • Is the ATF level within the specification? (See 05–17–8 Automatic Transaxle Fluid (ATF) Level Inspection.)	Yes	Go to the next step.
		No	Add ATF to the specified level, then go to Step 7. (See 05–17–8 Automatic Transaxle Fluid (ATF) Level Inspection.)
5	**INSPECT LINE PRESSURE** • Start the engine. • Measure the line pressure. **Specification** **Idle: 330—470 kPa {3.4—4.7 kgf/cm^2, 48—68 psi}** **Stall: 1,160—1,320 kPa {11.8—13.5 kgf/cm^2, 168—191 psi}** • Are the line pressures within the specifications? (See 05–17–3 Line Pressure Test.)	Yes	Go to the next step.
		No	• All ranges: Replace the oil pump or control valve body, then go to Step 7. • Any ranges: Replace the automatic transaxle, then go to Step 7. (See 05–17–26 AUTOMATIC TRANSAXLE REMOVAL/ INSTALLATION [FN4A-EL].) (See ATX Workshop Manual FN4A-EL.)
6	**INSPECT OPERATION OF EACH VALVE AND EACH SPRING** • Turn the ignition switch to the LOCK position. • Remove the control valve body. • Disassemble the control valve body. • Is each valve operation normal and is the return spring normal? (See 05–17–32 CONTROL VALVE BODY REMOVAL [FN4A-EL].) (See 05–17–33 CONTROL VALVE BODY INSTALLATION [FN4A-EL].) (See ATX Workshop Manual FN4A-EL.)	Yes	Replace the automatic transaxle, then go to the next step. (See 05–17–26 AUTOMATIC TRANSAXLE REMOVAL/ INSTALLATION [FN4A-EL].) (See ATX Workshop Manual FN4A-EL.)
		No	Repair or replace the shift valve and return spring, then go to the next step. (See 05–17–32 CONTROL VALVE BODY REMOVAL [FN4A-EL].) (See 05–17–33 CONTROL VALVE BODY INSTALLATION [FN4A-EL].) (See ATX Workshop Manual FN4A-EL.)
7	**VERIFY TROUBLESHOOTING OF DTC P0762 COMPLETED** • Make sure to reconnect all the disconnected connectors. • Clear the DTC from the memory using the WDS or equivalent. • Start the engine. • Warm up the ATX. • Drive the vehicle under the following conditions and make sure that gears shift smoothly from 1GR to 4GR: — ATF temperature: **20 °C {68 °F} or more** — Drive in the D range — Vehicle speed (VSS PID): **18 km/h {11 mph} or more** • Is the PENDING CODE present?	Yes	Replace the PCM, then go to the next step. (See 01–40A–5 PCM REMOVAL/INSTALLATION [L8, LF].)
		No	Go to the next step.

STEP	INSPECTION		ACTION
8	**VERIFY AFTER REPAIR PROCEDURE** • Perform the “After Repair Procedure”. (See 05–02–4 AFTER REPAIR PROCEDURE [FN4A-EL].) • Are any DTCs present?	Yes	Go to the applicable DTC inspection.
		No	DTC troubleshooting completed.

DTC P0763 [FN4A-EL]

DPE050200000W29

DTC P0763	Shift solenoid C malfunction (electrical)
DETECTION CONDITION	• If the PCM detects either of the following conditions, the PCM determines that shift solenoid C circuit has a malfunction. — Shift solenoid C voltage stuck at **B+** after engine start — Shift solenoid C voltage stuck at **0 V** after engine start **Diagnostic support note:** • This is a continuous monitor (CCM). • The MIL illuminates if the PCM detects the above malfunction conditions during the first drive cycle. • A PENDING CODE is not available. • FREEZE FRAME DATA is available. • The AT warning light illuminates. • The DTC is stored in the PCM memory.
POSSIBLE CAUSE	• Shift solenoid C malfunction • Short to ground in wiring harness between ATX terminal G and PCM terminal 1D • Short to power supply in wiring harness between ATX terminal G and PCM terminal 1D • Open circuit in wiring harness between shift solenoid C terminal B and ATX terminal G • Open circuit in wiring harness between ATX terminal G and PCM terminal 1D • Open circuit in wiring harness between shift solenoid C terminal A and body ground • Damaged connector between shift solenoid C and PCM • PCM malfunction

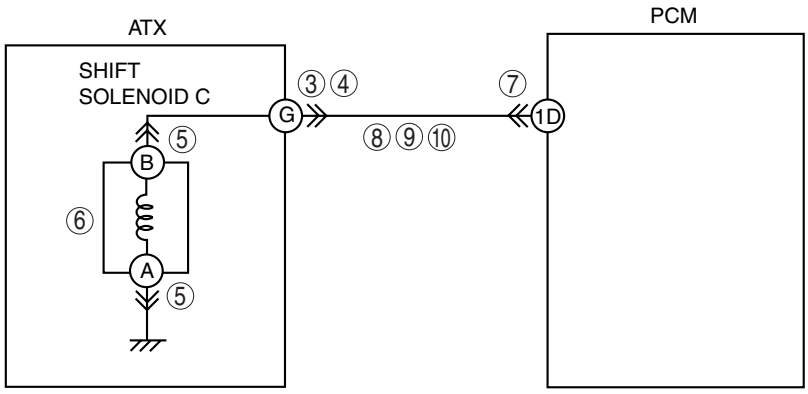

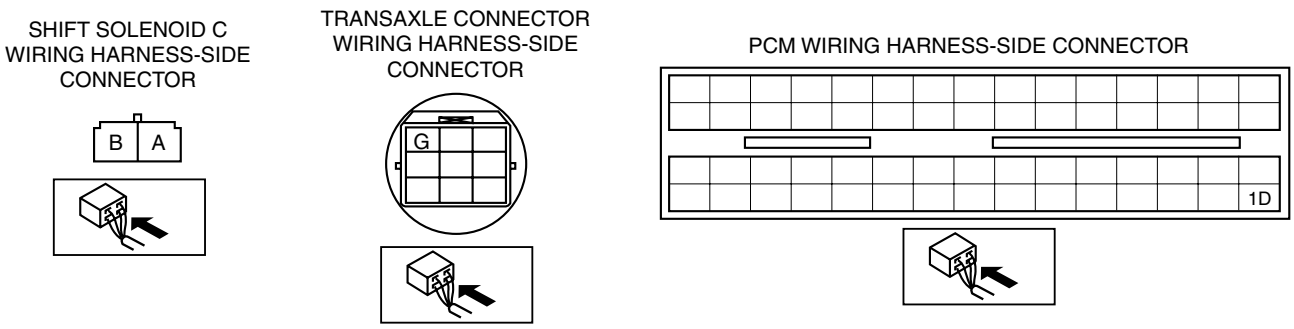

Diagnostic procedure

STEP	INSPECTION		ACTION
1	**VERIFY FREEZE FRAME DATA HAS BEEN RECORDED** • Has the FREEZE FRAME DATA been recorded?	Yes	Go to the next step.
		No	Record the FREEZE FRAME DATA on the repair order, then go to the next step.
2	**VERIFY RELATED REPAIR INFORMATION AVAILABILITY** • Verify related Service Bulletins and/or on-line repair information availability. • Is any related repair information available?	Yes	Perform repair or diagnosis according to the available repair information. • If the vehicle is not repaired, go to the next step.
		No	Go to the next step.
3	**INSPECT ATX CONNECTOR FOR POOR CONNECTION** • Turn the ignition switch to the LOCK position. • Disconnect the ATX connector. • Inspect for poor connection (such as damaged/ pulled-out pins, corrosion). • Is the connection normal?	Yes	Go to the next step.
		No	Repair or replace the connector and/or terminals, then go to Step 11.
4	**INSPECT RESISTANCE** • Inspect the resistance between ATX terminal G (transaxle case side) and body ground. • Is the resistance **within 1.0—4.2 ohms**? (See 05–17–23 Resistance Inspection (On-Vehicle Inspection).)	Yes	Go to Step 7.
		No	Go to the next step.
5	**INSPECT SHIFT SOLENOID C CONNECTOR FOR POOR CONNECTION** • Disconnect the shift solenoid C connector. • Inspect for poor connection (such as damaged/ pulled-out pins, corrosion). • Is the connection normal?	Yes	Go to the next step.
		No	Repair or replace the connector and/or terminals, then go to Step 11.
6	**INSPECT RESISTANCE** • Inspect the resistance between shift solenoid C terminals A and B (part-side). • Is the resistance **within 1.0—4.2 ohms**? (See 05–17–24 Resistance Inspection (Off-Vehicle Inspection).)	Yes	Replace the solenoid wiring harness, then go to Step 11.
		No	Verify shift solenoid C installation. • If solenoid installed correctly, replace the solenoid, then go to Step 11. (See 05–17–25 SOLENOID VALVE REMOVAL/ INSTALLATION [FN4A-EL].)
7	**INSPECT PCM CONNECTOR FOR POOR CONNECTION** • Disconnect the PCM connector. • Inspect for poor connection (such as damaged/ pulled-out pins, corrosion). • Is the connection normal?	Yes	Go to the next step.
		No	Repair or replace the connector and/or terminals, then go to Step 11.
8	**INSPECT ATX CONNECTOR CIRCUIT FOR OPEN CIRCUIT** • Inspect for continuity between PCM terminal 1D (wiring harness-side) and ATX terminal G (wiring harness-side). • Is there continuity between terminals?	Yes	Go to the next step.
		No	Repair or replace the wiring harness, then go to Step 11.
9	**INSPECT ATX CONNECTOR CIRCUIT FOR SHORT TO POWER SUPPLY** • Turn the ignition switch to the ON position (engine off). • Inspect the voltage at ATX terminal G (wiring harness-side). • Is the voltage **0 V**?	Yes	Go to the next step.
		No	Repair or replace the wiring harness, then go to Step 11.
10	**INSPECT PCM CIRCUIT FOR SHORT TO GROUND** • Turn the ignition switch to the LOCK position. • Inspect for continuity between PCM terminal 1D (wiring harness-side) and body ground. • Is there continuity?	Yes	Repair or replace the wiring harness, then go to Step 11.
		No	Go to the next step.

STEP	INSPECTION		ACTION
11	**VERIFY TROUBLESHOOTING OF DTC P0763 COMPLETED** • Make sure to reconnect all the disconnected connectors. • Clear the DTC from the memory using the WDS or equivalent. • Drive the vehicle in D range and make sure that gears shift smoothly from 1GR to 4GR. • Are any DTCs present?	Yes	Replace the PCM, then go to the next step. (See 01–40A–5 PCM REMOVAL/INSTALLATION [L8, LF].)
		No	No concern is detected. Go to the next step.
12	**VERIFY AFTER REPAIR PROCEDURE** • Perform the “After Repair Procedure”. (See 05–02–4 AFTER REPAIR PROCEDURE [FN4A-EL].) • Are any DTCs present?	Yes	Go to the applicable DTC inspection.
		No	DTC troubleshooting completed.

DTC P0766 [FN4A-EL]

DPE050200000W30

DTC P0766	Shift solenoid D stuck off
DETECTION CONDITION	• When any of DTC P0732, and P0733 not output (correct judgment), and all conditions below are satisfied. — Is DTC P0731 not output while driving in 1GR at D range — ATF temperature **20 °C {68 °F} or more** — Driving in 4GR at D or M range — Engine running — Turbine speed **within 225—4,987 rpm** — Differential gear case (output) revolution speed **35 rpm or more** — Vehicle speed **29 km/h {18 mph} or more** — Throttle opening angle at closed throttle position — Revolution ratio of forward clutch drum revolution to differential gear case revolution **0.6 or less** or **1.277 or more** — None of the following DTCs are present: P0706, P0707, P0708, P0712, P0713, P0715, P0720, P0751, P0752, P0753, P0756, P0757, P0758, P0761, P0762, P0763, P0766, P0767, P0768, P0771, P0772, P0773 **Diagnostic support note:** • This is a continuous monitor (CCM). • The MIL illuminates if the PCM detects the above malfunction condition in two consecutive drive cycles or in one drive cycle while the DTC for the same malfunction has been stored in the PCM. • The PENDING CODE is available if the PCM detects the above malfunction condition during the first drive cycle. • FREEZE FRAME DATA is available. • The AT warning light illuminates. • The DTC is stored in the PCM memory.
POSSIBLE CAUSE	• ATF level low • Deteriorated ATF • Shift solenoid D stuck • Control valve stuck • PCM malfunction

Diagnostic procedure

STEP	INSPECTION		ACTION
1	**VERIFY FREEZE FRAME DATA HAS BEEN RECORDED** • Has the FREEZE FRAME DATA been recorded?	Yes	Go to the next step.
		No	Record the FREEZE FRAME DATA on the repair order, then go to the next step.
2	**VERIFY RELATED REPAIR INFORMATION AVAILABILITY** • Verify related Service Bulletins and/or on-line repair information availability. • Is any related repair information available?	Yes	Perform repair or diagnosis according to the available repair information. • If the vehicle is not repaired, go to the next step.
		No	Go to the next step.
3	**INSPECT ATF CONDITION** • Turn the ignition switch to the LOCK position. • Inspect the ATF condition. — Clear red: Normal — Milky: Water mixed in fluid — Reddish brown: Deteriorated ATF • Is it normal? (See 05–17–7 Automatic Transaxle Fluid (ATF) Condition Inspection.)	Yes	Go to the next step.
		No	If the ATF color is milky or reddish brown, replace ATF, then go to Step 5. (See 05–17–9 AUTOMATIC TRANSAXLE FLUID (ATF) REPLACEMENT [FN4A-EL].)
4	**INSPECT ATF LEVEL** • Start the engine. • Warm up the ATX. • Is the ATF level within the specification? (See 05–17–8 Automatic Transaxle Fluid (ATF) Level Inspection.)	Yes	Go to the next step.
		No	Add ATF to the specified level, then go to Step 7. (See 05–17–8 Automatic Transaxle Fluid (ATF) Level Inspection.)
5	**INSPECT LINE PRESSURE** • Start the engine. • Measure the line pressure. **Specification** **Idle: 330—470 kPa {3.4—4.7 kgf/cm^2, 48—68 psi}** **Stall: 1,160—1,320 kPa {11.8—13.5 kgf/cm^2, 168—191 psi}** • Are the line pressures within the specifications? (See 05–17–3 Line Pressure Test.)	Yes	Go to the next step.
		No	• All ranges: Replace the oil pump or control valve body, then go to Step 7. • Any ranges: Replace the automatic transaxle, then go to Step 7. (See 05–17–26 AUTOMATIC TRANSAXLE REMOVAL/ INSTALLATION [FN4A-EL].) (See ATX Workshop Manual FN4A-EL.)
6	**INSPECT OPERATION OF EACH VALVE AND EACH SPRING** • Turn the ignition switch to the LOCK position. • Remove the control valve body. • Disassemble the control valve body. • Is each valve operation normal and is the return spring normal? (See 05–17–32 CONTROL VALVE BODY REMOVAL [FN4A-EL].) (See 05–17–33 CONTROL VALVE BODY INSTALLATION [FN4A-EL].) (See ATX Workshop Manual FN4A-EL.)	Yes	Replace the automatic transaxle, then go to the next step. (See 05–17–26 AUTOMATIC TRANSAXLE REMOVAL/ INSTALLATION [FN4A-EL].) (See ATX Workshop Manual FN4A-EL.)
		No	Repair or replace the shift valve and return spring, then go to the next step. (See 05–17–32 CONTROL VALVE BODY REMOVAL [FN4A-EL].) (See 05–17–33 CONTROL VALVE BODY INSTALLATION [FN4A-EL].) (See ATX Workshop Manual FN4A-EL.)
7	**VERIFY TROUBLESHOOTING OF DTC P0766 COMPLETED** • Make sure to reconnect all the disconnected connectors. • Clear the DTC from the memory using the WDS or equivalent. • Start the engine. • Warm up the ATX. • Drive the vehicle under the following conditions and make sure that gears shift smoothly from 1GR to 4GR: — ATF temperature: **20 °C {68 °F} or more** — Drive in the D range — Throttle opening angle (TP PID): **0%** (4GR only) — Vehicle speed (VSS PID): **29 km/h {18 mph} or more**. (4GR only) • Is the PENDING CODE present?	Yes	Replace the PCM, then go to the next step. (See 01–40A–5 PCM REMOVAL/INSTALLATION [L8, LF].)
		No	Go to the next step.

STEP	INSPECTION		ACTION
8	**VERIFY AFTER REPAIR PROCEDURE** • Perform the “After Repair Procedure”. (See 05–02–4 AFTER REPAIR PROCEDURE [FN4A-EL].) • Are any DTCs present?	Yes	Go to the applicable DTC inspection.
		No	DTC troubleshooting completed.

DTC P0767 [FN4A-EL]

DPE050200000W31

DTC P0767	Shift solenoid D stuck on
DETECTION CONDITION	• When any of DTC P0731, P0732, P0734, and P0741 are not output, and all conditions below are satisfied. — ATF temperature **20 °C {68 °F} or more** — Driving in 3GR at D or M range — Engine running — Turbine speed **within 225—4,987 rpm** — Differential gear case (output) revolution speed **35 rpm or more** — Revolution ratio of forward clutch drum revolution to differential gear case revolution **0.848 or less** or **2.185 or more** — None of the following DTCs are present: P0706, P0707, P0708, P0712, P0713, P0715, P0720, P0751, P0752, P0753, P0756, P0757, P0758, P0761, P0762, P0763, P0766, P0767, P0768, P0771, P0772, P0773 **Diagnostic support note:** • This is a continuous monitor (CCM). • The MIL does not illuminate. • The PENDING CODE is available if the PCM detects the above malfunction condition during the first drive cycle. • FREEZE FRAME DATA is available. • The AT warning light illuminates. • The DTC is stored in the PCM memory.
POSSIBLE CAUSE	• ATF level low • Deteriorated ATF • Shift solenoid D stuck • Control valve stuck • PCM malfunction

Diagnostic procedure

STEP	INSPECTION		ACTION
1	**VERIFY FREEZE FRAME DATA HAS BEEN RECORDED** • Has the FREEZE FRAME DATA been recorded?	Yes	Go to the next step.
		No	Record the FREEZE FRAME DATA on the repair order, then go to the next step.
2	**VERIFY RELATED REPAIR INFORMATION AVAILABILITY** • Verify related Service Bulletins and/or on-line repair information availability. • Is any related repair information available?	Yes	Perform repair or diagnosis according to the available repair information. • If the vehicle is not repaired, go to the next step.
		No	Go to the next step.
3	**INSPECT ATF CONDITION** • Turn the ignition switch to the LOCK position. • Inspect the ATF condition. — Clear red: Normal — Milky: Water mixed in fluid — Reddish brown: Deteriorated ATF • Is it normal? (See 05–17–7 Automatic Transaxle Fluid (ATF) Condition Inspection.)	Yes	Go to the next step.
		No	If the ATF color is milky or reddish brown, replace ATF, then go to Step 5. (See 05–17–9 AUTOMATIC TRANSAXLE FLUID (ATF) REPLACEMENT [FN4A-EL].)
4	**INSPECT ATF LEVEL** • Start the engine. • Warm up the ATX. • Is the ATF level within the specification? (See 05–17–8 Automatic Transaxle Fluid (ATF) Level Inspection.)	Yes	Go to the next step.
		No	Add ATF to the specified level, then go to Step 7. (See 05–17–8 Automatic Transaxle Fluid (ATF) Level Inspection.)
5	**INSPECT LINE PRESSURE** • Start the engine. • Measure the line pressure. **Specification** **Idle: 330—470 kPa {3.4—4.7 kgf/cm^2, 48—68 psi}** **Stall: 1,160—1,320 kPa {11.8—13.5 kgf/cm^2, 168—191 psi}** • Are the line pressures within the specifications? (See 05–17–3 Line Pressure Test.)	Yes	Go to the next step.
		No	• All ranges: Replace the oil pump or control valve body, then go to Step 7. • Any ranges: Replace the automatic transaxle, then go to Step 7. (See 05–17–26 AUTOMATIC TRANSAXLE REMOVAL/ INSTALLATION [FN4A-EL].) (See ATX Workshop Manual FN4A-EL.)
6	**INSPECT OPERATION OF EACH VALVE AND EACH SPRING** • Turn the ignition switch to the LOCK position. • Remove the control valve body. • Disassemble the control valve body. • Is each valve operation normal and is the return spring normal? (See 05–17–32 CONTROL VALVE BODY REMOVAL [FN4A-EL].) (See 05–17–33 CONTROL VALVE BODY INSTALLATION [FN4A-EL].) (See ATX Workshop Manual FN4A-EL.)	Yes	Replace the automatic transaxle, then go to the next step. (See 05–17–26 AUTOMATIC TRANSAXLE REMOVAL/ INSTALLATION [FN4A-EL].) (See ATX Workshop Manual FN4A-EL.)
		No	Repair or replace the shift valve and return spring, then go to the next step. (See 05–17–32 CONTROL VALVE BODY REMOVAL [FN4A-EL].) (See 05–17–33 CONTROL VALVE BODY INSTALLATION [FN4A-EL].) (See ATX Workshop Manual FN4A-EL.)
7	**VERIFY TROUBLESHOOTING OF DTC P0767 COMPLETED** • Make sure to reconnect all the disconnected connectors. • Clear the DTC from the memory using the WDS or equivalent. • Start the engine. • Warm up the ATX. • Drive the vehicle under the following conditions and make sure that gears shift smoothly from 1GR to 4GR. — ATF temperature: **20 °C {68 °F} or more** — Drive in the D range, 3GR • Is the PENDING CODE present?	Yes	Replace the PCM, then go to the next step. (See 01–40A–5 PCM REMOVAL/INSTALLATION [L8, LF].)
		No	Go to the next step.
8	**VERIFY AFTER REPAIR PROCEDURE** • Perform the “After Repair Procedure”. (See 05–02–4 AFTER REPAIR PROCEDURE [FN4A-EL].) • Are any DTCs present?	Yes	Go to the applicable DTC inspection.
		No	DTC troubleshooting completed.

DTC P0768 [FN4A-EL]

DPE050200000W32

DTC P0768	Shift solenoid D malfunction (electrical)
DETECTION CONDITION	• If PCM detects either of the following conditions while driving in 4GR at D range, the PCM determines that shift solenoid D circuit has a malfunction. — Shift solenoid D voltage stuck at **B+** after engine start — Shift solenoid D voltage stuck at **0 V** after engine start **Diagnostic support note:** • This is a continuous monitor (CCM). • The MIL illuminates if the PCM detects the above malfunction conditions during the first drive cycle. • A PENDING CODE is not available. • FREEZE FRAME DATA is available. • The AT warning light illuminates. • The DTC is stored in the PCM memory.
POSSIBLE CAUSE	• Shift solenoid D malfunction • Short to ground in wiring harness between ATX terminal B and PCM terminal 1E • Short to power supply in wiring harness between ATX terminal B and PCM terminal 1E • Open circuit in wiring harness between shift solenoid D terminal A and ATX terminal B • Open circuit in wiring harness between ATX terminal B and PCM terminal 1E • Damaged connector between shift solenoid D and PCM • PCM malfunction

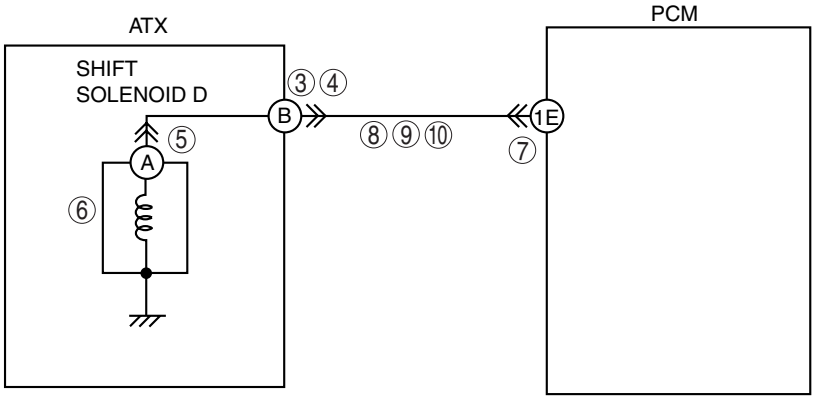

SHIFT SOLENOID D WIRING HARNESS-SIDE CONNECTOR

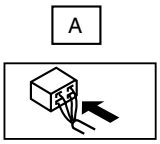

TRANSAXLE CONNECTOR WIRING HARNESS-SIDE CONNECTOR

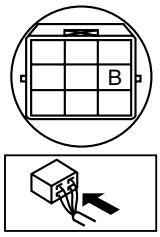

PCM WIRING HARNESS-SIDE CONNECTOR

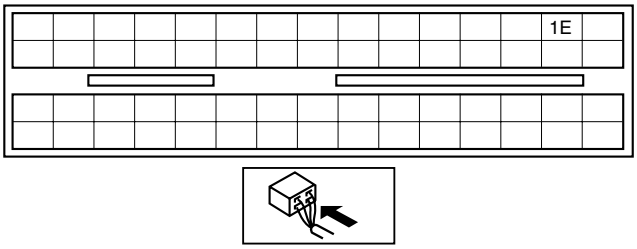

Diagnostic procedure

STEP	INSPECTION		ACTION
1	**VERIFY FREEZE FRAME DATA HAS BEEN RECORDED** • Has the FREEZE FRAME DATA been recorded?	Yes	Go to the next step.
		No	Record the FREEZE FRAME DATA on the repair order, then go to the next step.
2	**VERIFY RELATED REPAIR INFORMATION AVAILABILITY** • Verify related Service Bulletins and/or on-line repair information availability. • Is any related repair information available?	Yes	Perform repair or diagnosis according to the available repair information. • If the vehicle is not repaired, go to the next step.
		No	Go to the next step.
3	**INSPECT ATX CONNECTOR FOR POOR CONNECTION** • Turn the ignition switch to the LOCK position. • Disconnect the ATX connector. • Inspect for poor connection (such as damaged/ pulled-out pins, corrosion). • Is the connection normal?	Yes	Go to the next step.
		No	Repair or replace the connector and/or terminals, then go to Step 11.
4	**INSPECT RESISTANCE** • Inspect the resistance between ATX terminal B (transaxle case side) and body ground. • Is the resistance **within 10.9—26.2 ohms**? (See 05–17–23 Resistance Inspection (On-Vehicle Inspection).)	Yes	Go to Step 7.
		No	Go to the next step.
5	**INSPECT SHIFT SOLENOID D CONNECTOR FOR POOR CONNECTION** • Disconnect the shift solenoid D connector. • Inspect for poor connection (such as damaged/ pulled-out pins, corrosion). • Is the connection normal?	Yes	Go to the next step.
		No	Repair or replace the connector and/or terminals, then go to Step 11.
6	**INSPECT RESISTANCE** • Inspect the resistance between shift solenoid D terminal A (part-side) and body ground. • Is the resistance **within 10.9—26.2 ohms**? (See 05–17–23 Resistance Inspection (On-Vehicle Inspection).)	Yes	Replace the solenoid wiring harness, then go to Step 11.
		No	Verify shift solenoid D installation. • If solenoid installed correctly, replace the solenoid, then go to Step 11. (See 05–17–25 SOLENOID VALVE REMOVAL/ INSTALLATION [FN4A-EL].)
7	**INSPECT PCM CONNECTOR FOR POOR CONNECTION** • Disconnect the PCM connector. • Inspect for poor connection (such as damaged/ pulled-out pins, corrosion). • Is the connection normal?	Yes	Go to the next step.
		No	Repair or replace the connector and/or terminals, then go to Step 11.
8	**INSPECT ATX CONNECTOR CIRCUIT FOR OPEN CIRCUIT** • Inspect for continuity between PCM terminal 1E (wiring harness-side) and ATX terminal B (wiring harness-side). • Is there continuity between terminals?	Yes	Go to the next step.
		No	Repair or replace the wiring harness, then go to Step 11.
9	**INSPECT ATX CONNECTOR CIRCUIT FOR SHORT TO POWER SUPPLY** • Turn the ignition switch to the ON position (engine off). • Inspect the voltage at ATX terminal B (wiring harness-side). • Is the voltage **0 V**?	Yes	Go to the next step.
		No	Repair or replace the wiring harness, then go to Step 11.
10	**INSPECT PCM CIRCUIT FOR SHORT TO GROUND** • Turn the ignition switch to the LOCK position. • Inspect for continuity between PCM terminal 1E (wiring harness-side) and body ground. • Is there continuity?	Yes	Repair or replace the wiring harness, then go to Step 11.
		No	Go to the next step.

STEP	INSPECTION		ACTION
11	**VERIFY TROUBLESHOOTING OF DTC P0768 COMPLETED** • Make sure to reconnect all the disconnected connectors. • Clear the DTC from the memory using the WDS or equivalent. • Drive the vehicle in D range and make sure that gears shift smoothly from 1GR to 4GR. • Are any DTCs present?	Yes	Replace the PCM, then go to the next step. (See 01–40A–5 PCM REMOVAL/INSTALLATION [L8, LF].)
		No	No concern is detected. Go to the next step.
12	**VERIFY AFTER REPAIR PROCEDURE** • Perform the “After Repair Procedure”. (See 05–02–4 AFTER REPAIR PROCEDURE [FN4A-EL].) • Are any DTCs present?	Yes	Go to the applicable DTC inspection.
		No	DTC troubleshooting completed.

DTC P0771 [FN4A-EL]

DPE050200000W33

DTC P0771	Shift solenoid E stuck off
DETECTION CONDITION	• When any of DTC P0732, and P0734 are not output, and all conditions below are satisfied. — Is DTC P0731 not output while driving in 1GR at D range — ATF temperature **20 °C {68 °F} or more** — Driving in 4GR at D range — Engine running — Turbine speed **within 225—4,987 rpm** — Vehicle speed **within 60—100 km/h {37—62 mph}** — Torque converter clutch (TCC) operating — Shift solenoid A duty value exceeds **99%** — Difference between engine speed and turbine speed **more than 100 rpm** — None of the following DTCs are present: P0706, P0707, P0708, P0712, P0713, P0715, P0720, P0751, P0752, P0753, P0756, P0757, P0758, P0761, P0762, P0763, P0766, P0767, P0768, P0771, P0772, P0773 **Diagnostic support note:** • This is a continuous monitor (CCM). • The MIL illuminates if the PCM detects the above malfunction condition in two consecutive drive cycles or in one drive cycle while the DTC for the same malfunction has been stored in the PCM. • The PENDING CODE is available if the PCM detects the above malfunction condition during the first drive cycle. • FREEZE FRAME DATA is available. • The AT warning light illuminates. • The DTC is stored in the PCM memory.
POSSIBLE CAUSE	• ATF level low • Deteriorated ATF • Shift solenoid E stuck • Control valve stuck • PCM malfunction

Diagnostic procedure

STEP	INSPECTION		ACTION
1	**VERIFY FREEZE FRAME DATA HAS BEEN RECORDED** • Has the FREEZE FRAME DATA been recorded?	Yes	Go to the next step.
		No	Record the FREEZE FRAME DATA on the repair order, then go to the next step.
2	**VERIFY RELATED REPAIR INFORMATION AVAILABILITY** • Verify related Service Bulletins and/or on-line repair information availability. • Is any related repair information available?	Yes	Perform repair or diagnosis according to the available repair information. • If the vehicle is not repaired, go to the next step.
		No	Go to the next step.
3	**INSPECT ATF CONDITION** • Turn the ignition switch to the LOCK position. • Inspect the ATF condition. — Clear red: Normal — Milky: Water mixed in fluid — Reddish brown: Deteriorated ATF • Is it normal? (See 05–17–7 Automatic Transaxle Fluid (ATF) Condition Inspection.)	Yes	Go to the next step.
		No	If the ATF color is milky or reddish brown, replace ATF, then go to Step 5. (See 05–17–9 AUTOMATIC TRANSAXLE FLUID (ATF) REPLACEMENT [FN4A-EL].)
4	**INSPECT ATF LEVEL** • Start the engine. • Warm up the ATX. • Is the ATF level within the specification? (See 05–17–8 Automatic Transaxle Fluid (ATF) Level Inspection.)	Yes	Go to the next step.
		No	Add ATF to the specified level, then go to Step 7. (See 05–17–8 Automatic Transaxle Fluid (ATF) Level Inspection.)
5	**INSPECT LINE PRESSURE** • Start the engine. • Measure the line pressure. **Specification** **Idle: 330—470 kPa {3.4—4.7 kgf/cm^2, 48—68 psi}** **Stall: 1,160—1,320 kPa {11.8—13.5 kgf/cm^2, 168—191 psi}** • Are the line pressures within the specifications? (See 05–17–3 Line Pressure Test.)	Yes	Go to the next step.
		No	• All ranges: Replace the oil pump or control valve body, then go to Step 7. • Any ranges: Replace the automatic transaxle, then go to Step 7. (See 05–17–26 AUTOMATIC TRANSAXLE REMOVAL/ INSTALLATION [FN4A-EL].) (See ATX Workshop Manual FN4A-EL.)
6	**INSPECT OPERATION OF EACH VALVE AND EACH SPRING** • Turn the ignition switch to the LOCK position. • Remove the control valve body. • Disassemble the control valve body. • Is each valve operation normal and is the return spring normal? (See 05–17–32 CONTROL VALVE BODY REMOVAL [FN4A-EL].) (See 05–17–33 CONTROL VALVE BODY INSTALLATION [FN4A-EL].) (See ATX Workshop Manual FN4A-EL.)	Yes	Replace the automatic transaxle, then go to the next step. (See 05–17–26 AUTOMATIC TRANSAXLE REMOVAL/ INSTALLATION [FN4A-EL].) (See ATX Workshop Manual FN4A-EL.)
		No	Repair or replace the shift valve and return spring, then go to the next step. (See 05–17–32 CONTROL VALVE BODY REMOVAL [FN4A-EL].) (See 05–17–33 CONTROL VALVE BODY INSTALLATION [FN4A-EL].) (See ATX Workshop Manual FN4A-EL.)
7	**VERIFY TROUBLESHOOTING OF DTC P0771 COMPLETED** • Make sure to reconnect all the disconnected connectors. • Clear the DTC from the memory using the WDS or equivalent. • Start the engine. • Warm up the ATX. • Drive the vehicle under the following conditions and make sure that gears shift smoothly from 1GR to 4GR. — ATF temperature: **20 °C {68 °F} or more** — Drive in the D range — Vehicle speed: **within 60—100 km/h {37—62 mph}** (4GR only). • Is the PENDING CODE present?	Yes	Replace the PCM, then go to the next step. (See 01–40A–5 PCM REMOVAL/INSTALLATION [L8, LF].)
		No	Go to the next step.

STEP	INSPECTION		ACTION
8	**VERIFY AFTER REPAIR PROCEDURE** • Perform the “After Repair Procedure”. (See 05–02–4 AFTER REPAIR PROCEDURE [FN4A-EL].) • Are any DTCs present?	Yes	Go to the applicable DTC inspection.
		No	DTC troubleshooting completed.

DTC P0772 [FN4A-EL]

DPE050200000W34

DTC P0772	Shift solenoid E stuck on
DETECTION CONDITION	• When any of DTC P0731, P0733, and P0734 are not output, and all of the following conditions are satisfied under each of the following throttle conditions. — ATF temperature **20 °C {68 °F} or more** — Driving in 4GR at D or M range — Engine running — Turbine speed **within 225—4,987 rpm** — Vehicle speed **70 km/h {43 mph} or less** — Torque converter clutch (TCC) not operating — Difference between engine speed and turbine speed **50 rpm or less** — None of the following DTCs are present: P0706, P0707, P0708, P0712, P0713, P0715, P0720, P0751, P0752, P0753, P0756, P0757, P0758, P0761, P0762, P0763, P0766, P0767, P0768, P0771, P0772, P0773 • Throttle conditions — Throttle opening angle (TP PID) is **10% or more** and **5 s or more** have passed — Throttle opening angle (TP PID) is **within 3—10%** and **3 s or more** have passed — Throttle opening angle is at closed throttle position and **5 s or more** have passed **Diagnostic support note:** • This is a continuous monitor (CCM). • The MIL illuminates if the PCM detects the above malfunction condition in two consecutive drive cycles or in one drive cycle while the DTC for the same malfunction has been stored in the PCM. • The PENDING CODE is available if the PCM detects the above malfunction condition during the first drive cycle. • FREEZE FRAME DATA is available. • The AT warning light illuminates. • The DTC is stored in the PCM memory.
POSSIBLE CAUSE	• ATF level low • Deteriorated ATF • Shift solenoid E stuck • Control valve stuck • PCM malfunction

Diagnostic procedure

STEP	INSPECTION		ACTION
1	**VERIFY FREEZE FRAME DATA HAS BEEN RECORDED** • Has the FREEZE FRAME DATA been recorded?	Yes	Go to the next step.
		No	Record the FREEZE FRAME DATA on the repair order, then go to the next step.
2	**VERIFY RELATED REPAIR INFORMATION AVAILABILITY** • Verify related Service Bulletins and/or on-line repair information availability. • Is any related repair information available?	Yes	Perform repair or diagnosis according to the available repair information. • If the vehicle is not repaired, go to the next step.
		No	Go to the next step.
3	**INSPECT ATF CONDITION** • Turn the ignition switch to the LOCK position. • Inspect the ATF condition. — Clear red: Normal — Milky: Water mixed in fluid — Reddish brown: Deteriorated ATF • Is it normal? (See 05–17–7 Automatic Transaxle Fluid (ATF) Condition Inspection.)	Yes	Go to the next step.
		No	If the ATF color is milky or reddish brown, replace ATF, then go to Step 5. (See 05–17–9 AUTOMATIC TRANSAXLE FLUID (ATF) REPLACEMENT [FN4A-EL].)
4	**INSPECT ATF LEVEL** • Start the engine. • Warm up the ATX. • Is the ATF level within the specification? (See 05–17–8 Automatic Transaxle Fluid (ATF) Level Inspection.)	Yes	Go to the next step.
		No	Add ATF to the specified level, then go to Step 7. (See 05–17–8 Automatic Transaxle Fluid (ATF) Level Inspection.)
5	**INSPECT LINE PRESSURE** • Start the engine. • Measure the line pressure. **Specification** **Idle: 330—470 kPa {3.4—4.7 kgf/cm^2, 48—68 psi}** **Stall: 1,160—1,320 kPa {11.8—13.5 kgf/cm^2, 168—191 psi}** • Are the line pressures within the specifications? (See 05–17–3 Line Pressure Test.)	Yes	Go to the next step.
		No	• All ranges: Replace the oil pump or control valve body, then go to Step 7. • Any ranges: Replace the automatic transaxle, then go to Step 7. (See 05–17–26 AUTOMATIC TRANSAXLE REMOVAL/ INSTALLATION [FN4A-EL].) (See ATX Workshop Manual FN4A-EL.)
6	**INSPECT OPERATION OF EACH VALVE AND EACH SPRING** • Turn the ignition switch to the LOCK position. • Remove the control valve body. • Disassemble the control valve body. • Is each valve operation normal and is the return spring normal? (See 05–17–32 CONTROL VALVE BODY REMOVAL [FN4A-EL].) (See 05–17–33 CONTROL VALVE BODY INSTALLATION [FN4A-EL].) (See ATX Workshop Manual FN4A-EL.)	Yes	Replace the automatic transaxle, then go to the next step. (See 05–17–26 AUTOMATIC TRANSAXLE REMOVAL/ INSTALLATION [FN4A-EL].) (See ATX Workshop Manual FN4A-EL.)
		No	Repair or replace the shift valve and return spring, then go to the next step. (See 05–17–32 CONTROL VALVE BODY REMOVAL [FN4A-EL].) (See 05–17–33 CONTROL VALVE BODY INSTALLATION [FN4A-EL].) (See ATX Workshop Manual FN4A-EL.)
7	**VERIFY TROUBLESHOOTING OF DTC P0772 COMPLETED** • Make sure to reconnect all the disconnected connectors. • Clear the DTC from the memory using the WDS or equivalent. • Start the engine. • Warm up the ATX. • Drive the vehicle under the following conditions and make sure that gears shift smoothly from 1GR to 4GR. — ATF temperature: **20 °C {68 °F} or more** — Drive in the D range — Vehicle speed (VSS PID): **70 km/h {43 mph} or less** (4GR only) • Is the PENDING CODE present?	Yes	Replace the PCM, then go to the next step. (See 01–40A–5 PCM REMOVAL/INSTALLATION [L8, LF].)
		No	Go to the next step.

STEP	INSPECTION		ACTION
8	**VERIFY AFTER REPAIR PROCEDURE** • Perform the “After Repair Procedure”. (See 05–02–4 AFTER REPAIR PROCEDURE [FN4A-EL].) • Are any DTCs present?	Yes	Go to the applicable DTC inspection.
		No	DTC troubleshooting completed.

DTC P0773 [FN4A-EL]

DPE050200000W35

DTC P0773	Shift solenoid E malfunction (electrical)
DETECTION CONDITION	• If PCM detects either of the following conditions while driving in 4GR at D range with TCC operating, PCM determines that shift solenoid E circuit has a malfunction. — Shift solenoid E voltage stuck at **B+** after engine start — Shift solenoid E voltage stuck at **0 V** after engine start **Diagnostic support note:** • This is a continuous monitor (CCM). • The MIL illuminates if the PCM detects the above malfunction conditions during the first drive cycle. • A PENDING CODE is not available. • FREEZE FRAME DATA is available. • The AT warning light illuminates. • The DTC is stored in the PCM memory.
POSSIBLE CAUSE	• Shift solenoid E malfunction • Short to ground in wiring harness between ATX terminal F and PCM terminal 1F • Short to power supply in wiring harness between ATX terminal F and PCM terminal 1F • Open circuit in wiring harness between shift solenoid E terminal A and ATX terminal F • Open circuit in wiring harness between ATX terminal F and PCM terminal 1F • Damaged connector between shift solenoid E and PCM • PCM malfunction

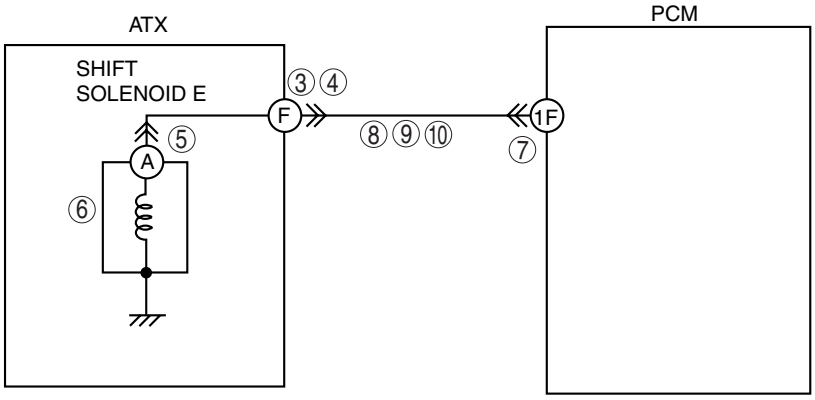

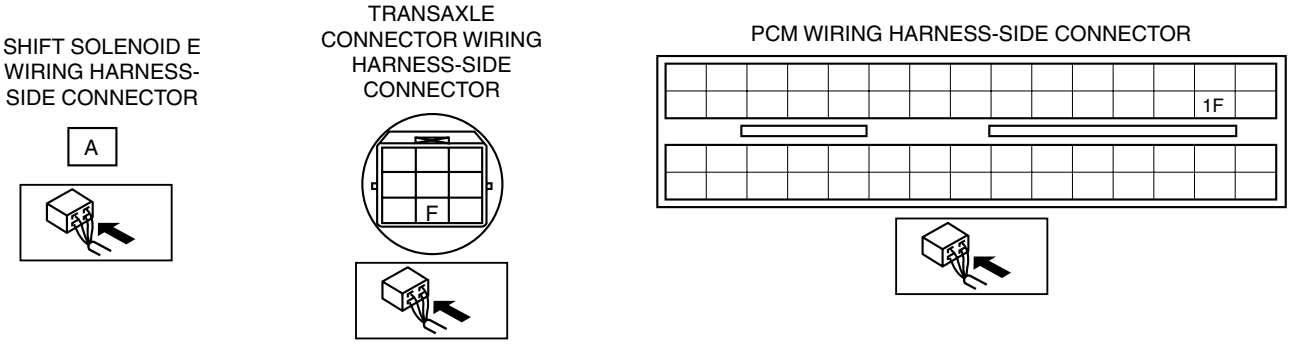

Diagnostic procedure

STEP	INSPECTION		ACTION
1	**VERIFY FREEZE FRAME DATA HAS BEEN RECORDED** • Has the FREEZE FRAME DATA been recorded?	Yes	Go to the next step.
		No	Record the FREEZE FRAME DATA on the repair order, then go to the next step.
2	**VERIFY RELATED REPAIR INFORMATION AVAILABILITY** • Verify related Service Bulletins and/or on-line repair information availability. • Is any related repair information available?	Yes	Perform repair or diagnosis according to the available repair information. • If the vehicle is not repaired, go to the next step.
		No	Go to the next step.
3	**INSPECT ATX CONNECTOR FOR POOR CONNECTION** • Turn the ignition switch to the LOCK position. • Disconnect the ATX connector. • Inspect for poor connection (such as damaged/ pulled-out pins, corrosion). • Is the connection normal?	Yes	Go to the next step.
		No	Repair or replace the connector and/or terminals, then go to Step 11.
4	**INSPECT RESISTANCE** • Inspect the resistance between ATX terminal F (transaxle case side) and body ground. • Is the resistance **within 10.9—26.2 ohms**? (See 05–17–23 Resistance Inspection (On-Vehicle Inspection).)	Yes	Go to Step 7.
		No	Go to the next step.
5	**INSPECT SHIFT SOLENOID E CONNECTOR FOR POOR CONNECTION** • Disconnect the shift solenoid E connector. • Inspect for poor connection (such as damaged/ pulled-out pins, corrosion). • Is the connection normal?	Yes	Go to the next step.
		No	Repair or replace the connector and/or terminals, then go to Step 11.
6	**INSPECT RESISTANCE** • Inspect the resistance between shift solenoid E terminal A (part-side) and body ground. • Is the resistance **within 10.9—26.2 ohms**? (See 05–17–24 Resistance Inspection (Off-Vehicle Inspection).)	Yes	Replace the solenoid wiring harness, then go to Step 11.
		No	Verify shift solenoid E installation. • If solenoid installed correctly, replace the solenoid, then go to Step 11. (See 05–17–25 SOLENOID VALVE REMOVAL/ INSTALLATION [FN4A-EL].)
7	**INSPECT PCM CONNECTOR FOR POOR CONNECTION** • Disconnect the PCM connector. • Inspect for poor connection (such as damaged/ pulled-out pins, corrosion). • Is the connection normal?	Yes	Go to the next step.
		No	Repair or replace the connector and/or terminals, then go to Step 11.
8	**INSPECT ATX CONNECTOR CIRCUIT FOR OPEN CIRCUIT** • Inspect for continuity between PCM terminal 1F (wiring harness-side) and ATX terminal F (wiring harness-side). • Is there continuity between terminals?	Yes	Go to the next step.
		No	Repair or replace the wiring harness, then go to Step 11.
9	**INSPECT ATX CONNECTOR CIRCUIT FOR SHORT TO POWER SUPPLY** • Turn the ignition switch to the ON position (engine off). • Inspect the voltage at ATX terminal F (wiring harness-side). • Is the voltage **0 V**?	Yes	Go to the next step.
		No	Repair or replace the wiring harness, then go to Step 11.
10	**INSPECT PCM CIRCUIT FOR SHORT TO GROUND** • Turn the ignition switch to the LOCK position. • Inspect for continuity between PCM terminal 1F (wiring harness-side) and body ground. • Is there continuity?	Yes	Repair or replace the wiring harness, then go to Step 11.
		No	Go to the next step.

STEP	INSPECTION		ACTION
11	**VERIFY TROUBLESHOOTING OF DTC P0773 COMPLETED** • Make sure to reconnect all the disconnected connectors. • Clear the DTC from the memory using the WDS or equivalent. • Drive the vehicle in D range and make sure that gears shift smoothly from 1GR to 4GR. • Are any DTCs present?	Yes	Replace the PCM, then go to the next step. (See 01–40A–5 PCM REMOVAL/INSTALLATION [L8, LF].)
		No	No concern is detected. Go to the next step.
12	**VERIFY AFTER REPAIR PROCEDURE** • Perform the “After Repair Procedure”. (See 05–02–4 AFTER REPAIR PROCEDURE [FN4A-EL].) • Are any DTCs present?	Yes	Go to the applicable DTC inspection.
		No	DTC troubleshooting completed.

DTC P0841 [FN4A-EL]

DPE050200000W38

DTC P0841	Oil pressure switch circuit malfunction
DETECTION CONDITION	• When DTC P0731, P0732, P0733 and P0734 are not output and **10 s or more** has passed. — When all the conditions below are satisfied while driving in 1GR, 2GR or 3GR • ATF temperature **20 °C {68 °F} or more** • Oil pressure switch OFF • Revolution ratio of forward clutch drum revolution to differential gear case revolution **below 0.91 or more than 3.08** • None of the following DTCs are present: P0706, P0707, P0708, P0712, P0713, P0715, P0720, P0751, P0752, P0753, P0756, P0757, P0758, P0761, P0762, P0763, P0766, P0767, P0768, P0771, P0772, P0773 — When all conditions below are satisfied while driving in 4GR • ATF temperature **20 °C {68 °F} or more** • Oil pressure switch ON • Revolution ratio of forward clutch drum revolution to differential gear case revolution **below 0.64 or more than 0.82** • None of the following DTCs are present: P0706, P0707, P0708, P0712, P0713, P0715, P0720, P0751, P0752, P0753, P0756, P0757, P0758, P0761, P0762, P0763, P0766, P0767, P0768, P0771, P0772, P0773 **Diagnostic support note:** • This is a continuous monitor (CCM). • The MIL illuminates if the PCM detects the above malfunction condition in two consecutive drive cycles or in one drive cycle while the DTC for the same malfunction has been stored in the PCM. • A PENDING CODE is not available. • FREEZE FRAME DATA is not available. • The AT warning light illuminates. • The DTC is stored in the PCM memory.
POSSIBLE CAUSE	• Oil pressure switch malfunction • Open circuit in wiring harness between oil pressure switch terminal A and PCM terminal 1L • Short to ground in wiring harness between oil pressure switch terminal A and PCM terminal 1L • Damaged connector between oil pressure switch and PCM • PCM malfunction

DTC P0841	Oil pressure switch circuit malfunction

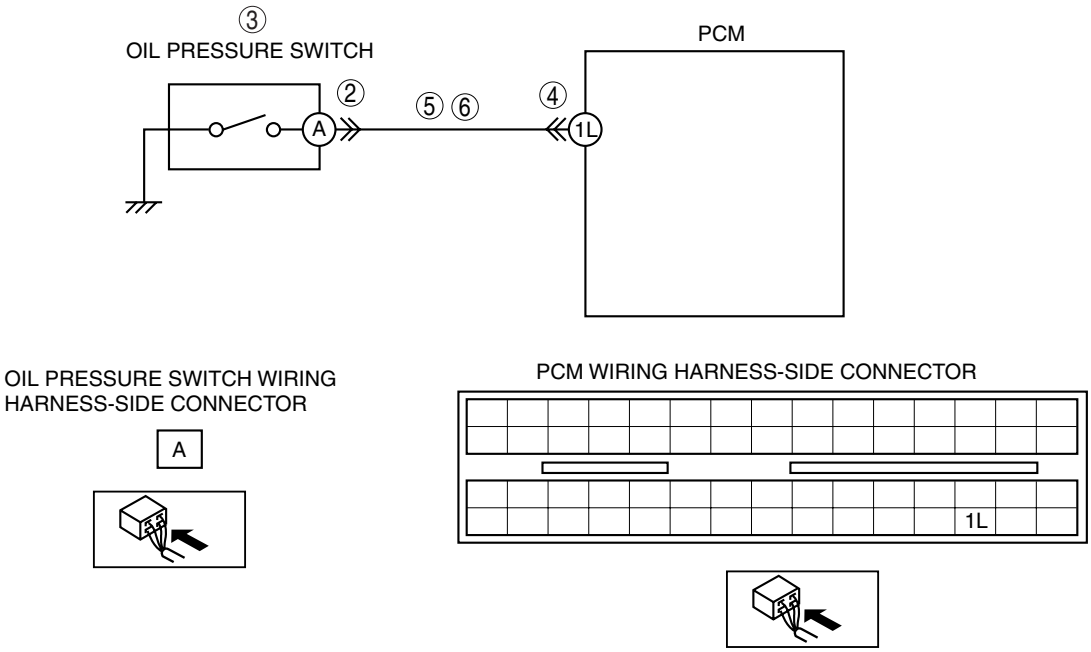

Diagnostic procedure

STEP	INSPECTION		ACTION
1	**VERIFY FREEZE FRAME DATA HAS BEEN RECORDED** • Has the FREEZE FRAME DATA been recorded?	Yes	Go to the next step.
		No	Record the FREEZE FRAME DATA on the repair order, then go to the next step.
2	**INSPECT OIL PRESSURE SWITCH CONNECTOR FOR POOR CONNECTION** • Disconnect the shift oil pressure switch connector. • Inspect for poor connection (such as damaged/ pulled-out pins, corrosion). • Is the connection normal?	Yes	Go to the next step.
		No	Repair or replace the connector and/or terminals, then go to Step 7.
3	**INSPECT CONTINUITY** • Inspect for continuity between oil pressure switch terminal A (part-side) and body ground. • Is there continuity?	Yes	Replace the oil pressure switch, then go to Step 7. (See 05–17–19 OIL PRESSURE SWITCH REMOVAL/ INSTALLATION [FN4A-EL].)
		No	Go to the next step.
4	**INSPECT PCM CONNECTOR FOR POOR CONNECTION** • Disconnect the PCM connector. • Inspect for poor connection (such as damaged/ pulled-out pins, corrosion). • Is the connection normal?	Yes	Go to the next step.
		No	Repair or replace the connector and/or terminals, then go to Step 7.
5	**INSPECT OIL PRESSURE SWITCH CIRCUIT FOR OPEN CIRCUIT** • Inspect for continuity between PCM terminal 1L (wiring harness-side) and ATX terminal A (wiring harness-side). • Is there continuity between terminals?	Yes	Go to the next step.
		No	Repair or replace the wiring harness, then go to Step 7.
6	**INSPECT PCM CIRCUIT FOR SHORT TO GROUND** • Turn the ignition switch to the LOCK position. • Inspect for continuity between PCM terminal 1L (wiring harness-side) and body ground. • Is there continuity?	Yes	Repair or replace the wiring harness, then go to the next step.
		No	Replace the oil pressure switch, then go to the next step. (See 05–17–19 OIL PRESSURE SWITCH REMOVAL/ INSTALLATION [FN4A-EL].)
7	**VERIFY TROUBLESHOOTING OF DTC P0841 COMPLETED** • Make sure to reconnect all the disconnected connectors. • Clear the DTC from the memory using the WDS or equivalent. • Drive the vehicle and make sure that gears shift smoothly from 1GR to 4GR. • Are any DTCs present?	Yes	Replace the PCM, then go to the next step. (See 01–40A–5 PCM REMOVAL/INSTALLATION [L8, LF].)
		No	No concern is detected. Go to the next step.
8	**VERIFY AFTER REPAIR PROCEDURE** • Perform the “After Repair Procedure”. (See 05–02–4 AFTER REPAIR PROCEDURE [FN4A-EL].) • Are any DTCs present?	Yes	Go to the applicable DTC inspection.
		No	DTC troubleshooting completed.

DTC P0894 [FN4A-EL]

DPE050200000W36

DTC P0894	Forward clutch power transmission malfunction
DETECTION CONDITION	• With the engine running, all of the following conditions are met: — ATF temperature **20 °C {68 °F} or more** — Vehicle speed **0 km/h {0 mph}** (brake on) — Even when 3 s or more have passed since the selector lever was shifted from the N position to the D range, the turbine speed will not decrease to less than 187 rpm. **Diagnostic support note:** • This is a continuous monitor (CCM). • The MIL does not illuminate if the PCM detects above malfunction conditions during the first drive cycle. • A PENDING CODE is not available. • FREEZE FRAME DATA is not available. • The AT warning light illuminates. • DTCs are stored in the PCM memory.

DTC P0894	Forward clutch power transmission malfunction
POSSIBLE CAUSE	• Forward clutch not engaged or slipped • Short to power supply in wiring harness between shift solenoid A terminal B and PCM terminal 1B • Shift solenoid A stuck on • VSS malfunction • PCM malfunction

Diagnostic procedure

STEP	INSPECTION		ACTION
1	**VERIFY FREEZE FRAME DATA HAS BEEN RECORDED** • Has the FREEZE FRAME DATA been recorded?	Yes	Go to the next step.
		No	Record the FREEZE FRAME DATA on the repair order, then go to the next step.
2	**VERIFY DTCS** • Turn the ignition switch to the LOCK position, then to the ON position. • Verify the DTCs in the PCM memory. • Are DTCs P0720, P0752, and P0753 output?	Yes	Go to the applicable DTC inspection.
		No	Replace the forward clutch, then go to the next step.
3	**VERIFY TROUBLESHOOTING OF DTC P0894 COMPLETED** • Make sure to reconnect all the disconnected connectors. • Clear the DTC from the memory using the WDS or equivalent. • Warm up the engine. • With the selector lever in the D range and the vehicle stopped (brake on), wait **3 s or more**. • Are any DTCs present?	Yes	Replace the PCM, then go to the next step. (See 01–40A–5 PCM REMOVAL/INSTALLATION [L8, LF].)
		No	No concern is detected. Go to the next step.
4	**VERIFY AFTER REPAIR PROCEDURE** • Perform the “After Repair Procedure”. (See 05–02–4 AFTER REPAIR PROCEDURE [FN4A-EL].) • Are any DTCs present?	Yes	Go to the applicable DTC inspection.
		No	DTC troubleshooting completed.

PID/DATA MONITOR INSPECTION [FN4A-EL]

DPE050200000W37

1. Connect the WDS or equivalent to the DLC-2.
2. Measure the PID value.

Note

- Perform part inspection for the output device after PCM inspection.
- The PID/DATA MONITOR function monitors the calculated value of the input/output signals in the PCM. Therefore, if a monitored value of an output device is out of specification, it is necessary to inspect the monitored value of the input device related to the output device control. Since an output device malfunction is not directly indicated as a malfunction of the monitored value for the output device, it is necessary to inspect the output device individually using methods such as the simulation function.

PID/DATA MONITOR AND RECORD function table

Monitor item (Definition)	Unit/ Condition		Condition/Specification	Action	PCM terminal
DWN SW (Down switch)	On/Off		• M range, downshift: On • Other: Off	Inspect the selector lever component. (See 05–18–4 SELECTOR LEVER COMPONENT INSPECTION.)	1P
GEAR	1/2/3/4		• 1GR: 1 • 2GR: 2 • 3GR: 3 • 4GR: 4	Inspect the following PIDs: SSA/SS1, SSB/SS2, SSC/SS3	N/A
HTM_CNT	—		Indicates number of high oil temperature mode (ATF temperature at 130 °C {266 °F} or more) operations • 0—255	—	—
HTM_DIS	km		Indicates travel distance after operation of high oil temperature mode (ATF temperature at 130 °C {266 °F} or more) • 0—2550 km	—	—
LINEDES	kPa	inHg	Indicates target line pressure	Inspect the following PIDs: OSS, TFT, TFTV, THOP, TR, TR_SENS, TSS	N/A
LPS (Pressure control solenoid)	A		Change current value according to throttle opening angle	Inspect the pressure control solenoid. (See 05–17–23 SOLENOID VALVE INSPECTION [FN4A-EL].)	1H 1G
MNL SW (M range switch)	On/Off		• M range: On • Other: Off	Inspect the selector lever component. (See 05–18–4 SELECTOR LEVER COMPONENT INSPECTION.)	1O
OP_SW_B (Oil pressure switch)	On/Off		• 1GR, 2GR or 3GR: On • Other: Off	Inspect the oil pressure switch. (See 05–17–18 OIL PRESSURE SWITCH INSPECTION [FN4A-EL].)	1L
OSS (Output shaft speed)	RPM		Indicates output shaft speed • Ignition switch ON: **0 RPM** • Vehicle speed 25 km/h {16 mph}: **200—230 RPM**	Inspect the VSS. (See 05–17–21 VEHICLE SPEED SENSOR (VSS) INSPECTION [FN4A-EL].)	1J
SSA/SS1 (Shift solenoid A)	%		• 4GR: **99%** • others: **0%**	Inspect the shift solenoid A. (See 05–17–23 SOLENOID VALVE INSPECTION [FN4A-EL].)	1B
SSB/SS2 (Shift solenoid B)	%		• 1GR at D range: **99%** • Others: **0%**	Inspect the shift solenoid B. (See 05–17–23 SOLENOID VALVE INSPECTION [FN4A-EL].)	1C
SSC/SS3 (Shift solenoid C)	%		• 1GR/2GR: **99%** • Others: **0%**	Inspect the shift solenoid C. (See 05–17–23 SOLENOID VALVE INSPECTION [FN4A-EL].)	1D
TFT (Transaxle fluid temperature)	°C	°F	Indicates transaxle fluid temperature	Inspect the TFT sensor. (See 05–17–16 TRANSAXLE FLUID TEMPERATURE (TFT) SENSOR INSPECTION [FN4A-EL].)	1U
TFTV (Transaxle fluid signal voltage)	V		• ATF **20 °C {68 °F}**: **3.4—3.6 V** • ATF **130 °C {266 °F}**: **0.4—0.5 V**	Inspect the TFT sensor. (See 05–17–16 TRANSAXLE FLUID TEMPERATURE (TFT) SENSOR INSPECTION [FN4A-EL].)	1U
THOP (Throttle position sensor)	%		• CTP: **12%** • WOT: **75%**	Inspect the TP sensor. (See 01–40A–31 THROTTLE POSITION (TP) SENSOR INSPECTION [L8, LF].)	2I
TR (Transaxle range)	—		• P position: P • R position: R • N position: N • D range: D	Inspect the TR switch. (See 05–17–9 TRANSAXLE RANGE (TR) SWITCH INSPECTION [FN4A-EL].)	1S
TR_SENS (TR switch)	V		• P position: **4.34—4.79 V** • R position: **3.83—4.18 V** • N position: **3.05—3.50 V** • D range: **2.23—2.66 V**	Inspect the TR switch. (See 05–17–9 TRANSAXLE RANGE (TR) SWITCH INSPECTION [FN4A-EL].)	1S

Monitor item (Definition)	Unit/ Condition	Condition/Specification	Action	PCM terminal
TSS (Input/turbine speed)	RPM	Indicates Input/turbine speed • Ignition switch ON: **0 RPM** • Idle: **700—800 RPM** (P, N position)	Inspect the input/turbine speed sensor. (See 05–17–20 INPUT/TURBINE SPEED SENSOR INSPECTION [FN4A-EL].)	1M 1Q
UP SW (Up switch)	On/Off	• M range, upshift: On • Other: Off	Inspect the selector lever component. (See 05–18–4 SELECTOR LEVER COMPONENT INSPECTION.)	1K

05–03 SYMPTOM TROUBLESHOOTING

AUTOMATIC TRANSAXLE CONTROL SYSTEM WIRING DIAGRAM [FN4A-EL] 05–03–2
FOREWORD [FN4A-EL] 05–03–3
BASIC INSPECTION [FN4A-EL] 05–03–4
SYMPTOM TROUBLESHOOTING ITEM TABLE [FN4A-EL] 05–03–4
QUICK DIAGNOSIS CHART [FN4A-EL] 05–03–7
NO.1 VEHICLE DOES NOT MOVE IN D, M RANGES, OR IN R POSITION [FN4A-EL]. 05–03–9
NO.2 VEHICLE MOVES IN N POSITION [FN4A-EL] 05–03–10
NO.3 VEHICLE MOVES IN P POSITION, OR PARKING GEAR DOES NOT DISENGAGE WHEN P IS DISENGAGED [FN4A-EL] 05–03–11
NO.4 EXCESSIVE CREEP [FN4A-EL] 05–03–11
NO.5 NO CREEP AT ALL [FN4A-EL]. . . 05–03–11
NO.6 LOW MAXIMUM SPEED AND POOR ACCELERATION [FN4A-EL] 05–03–12
NO.7 NO SHIFTING [FN4A-EL] 05–03–14
NO.8 DOES NOT SHIFT TO 4GR [FN4A-EL] 05–03–15
NO.9 ABNORMAL SHIFTING [FN4A-EL] 05–03–17
NO.10 FREQUENT SHIFTING [FN4A-EL] 05–03–18
NO.11 SHIFT POINT IS HIGH OR LOW [FN4A-EL] 05–03–18
NO.12 TORQUE CONVERTER CLUTCH (TCC) NON-OPERATION [FN4A-EL] 05–03–18
NO.13 NO KICKDOWN [FN4A-EL]. 05–03–19
NO.14 ENGINE FLARES UP OR SLIPS WHEN UPSHIFTING OR DOWNSHIFTING [FN4A-EL] 05–03–20
NO.15 ENGINE FLARES UP OR SLIPS WHEN ACCELERATING VEHICLE [FN4A-EL] 05–03–20
NO.16 JUDDER UPON TORQUE CONVERTER CLUTCH (TCC) OPERATION [FN4A-EL]. 05–03–21
NO.17 EXCESSIVE SHIFT SHOCK FROM N TO D OR N TO R POSITION/RANGE [FN4A-EL]. 05–03–22
NO.18 EXCESSIVE SHIFT SHOCK IS FELT WHEN UPSHIFTING AND DOWNSHIFTING [FN4A-EL]. 05–03–24
NO.19 EXCESSIVE SHIFT SHOCK ON TORQUE CONVERTER CLUTCH (TCC) [FN4A-EL]. 05–03–25
NO.20 NOISE OCCURS AT IDLE WHEN VEHICLE IS STOPPED IN ALL POSITIONS/RANGES [FN4A-EL]. 05–03–26
NO.21 NOISE OCCURS AT IDLE WHEN VEHICLE IS STOPPED IN D, M RANGES, OR IN R POSITION [FN4A-EL]. 05–03–26
NO.22 NO ENGINE BRAKING IN 1GR POSITION OF M RANGE [FN4A-EL]. 05–03–26
NO.23 TRANSAXLE OVERHEATS [FN4A-EL]. 05–03–27
NO.24 ENGINE STALLS WHEN SHIFTED TO D, M RANGES, OR IN R POSITION [FN4A-EL]. 05–03–28
NO.25 ENGINE STALLS WHEN DRIVING AT SLOW SPEEDS OR STOPPING [FN4A-EL] . . . 05–03–28
NO.26 STARTER DOES NOT WORK [FN4A-EL]. 05–03–29
NO.27 GEAR POSITION INDICATOR LIGHT DOES NOT ILLUMINATE IN M RANGE [FN4A-EL]. 05–03–29
NO.28 GEAR POSITION INDICATOR LIGHT ILLUMINATES IN D RANGE OR P, N, R POSITIONS [FN4A-EL]. 05–03–29
NO.29 DOES NOT UPSHIFT IN M RANGE [FN4A-EL]. 05–03–30
NO.30 DOES NOT DOWNSHIFT IN M RANGE [FN4A-EL]. 05–03–30

AUTOMATIC TRANSAXLE CONTROL SYSTEM WIRING DIAGRAM [FN4A-EL]

DPE050300000W35

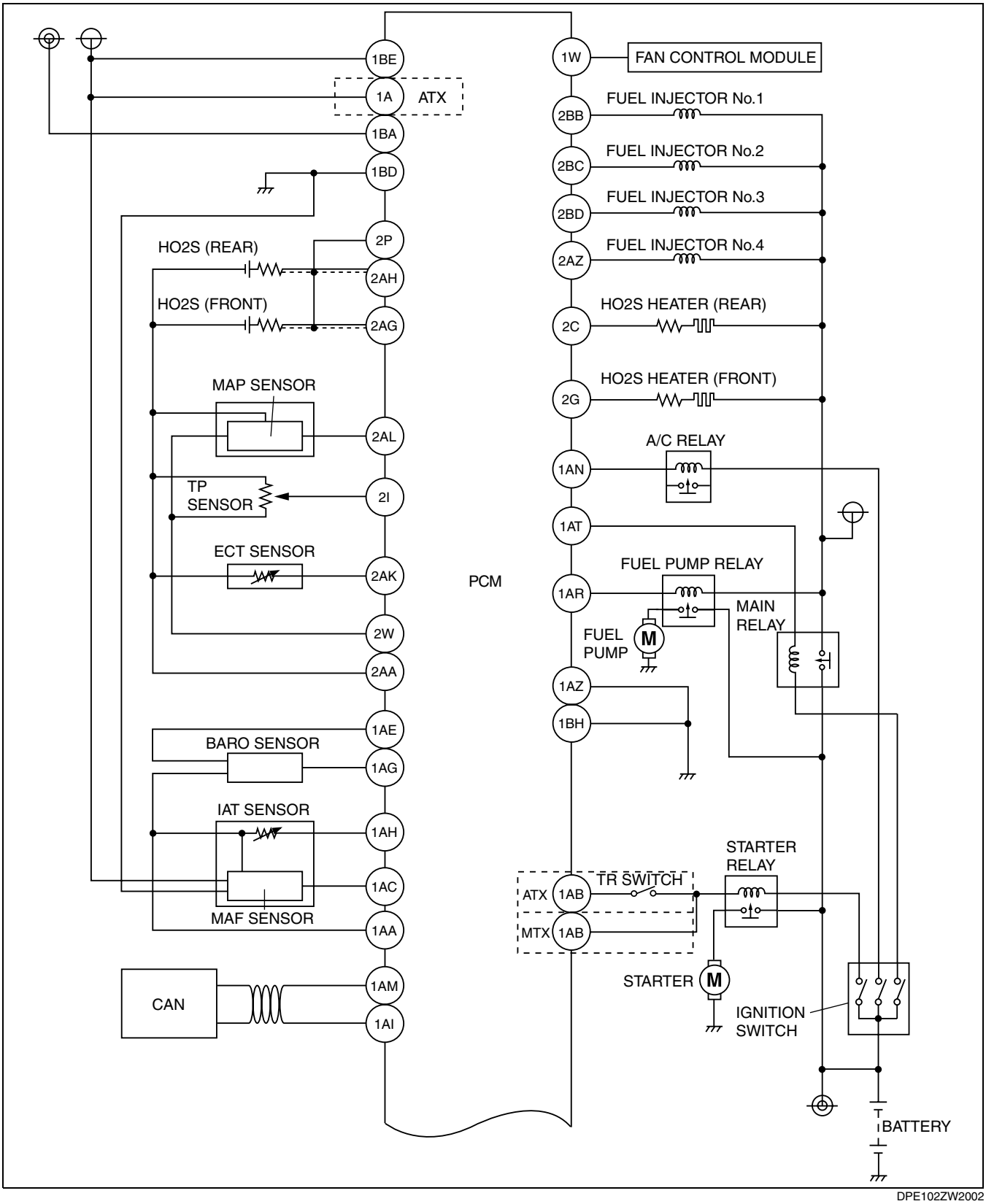

DPE102ZW2002

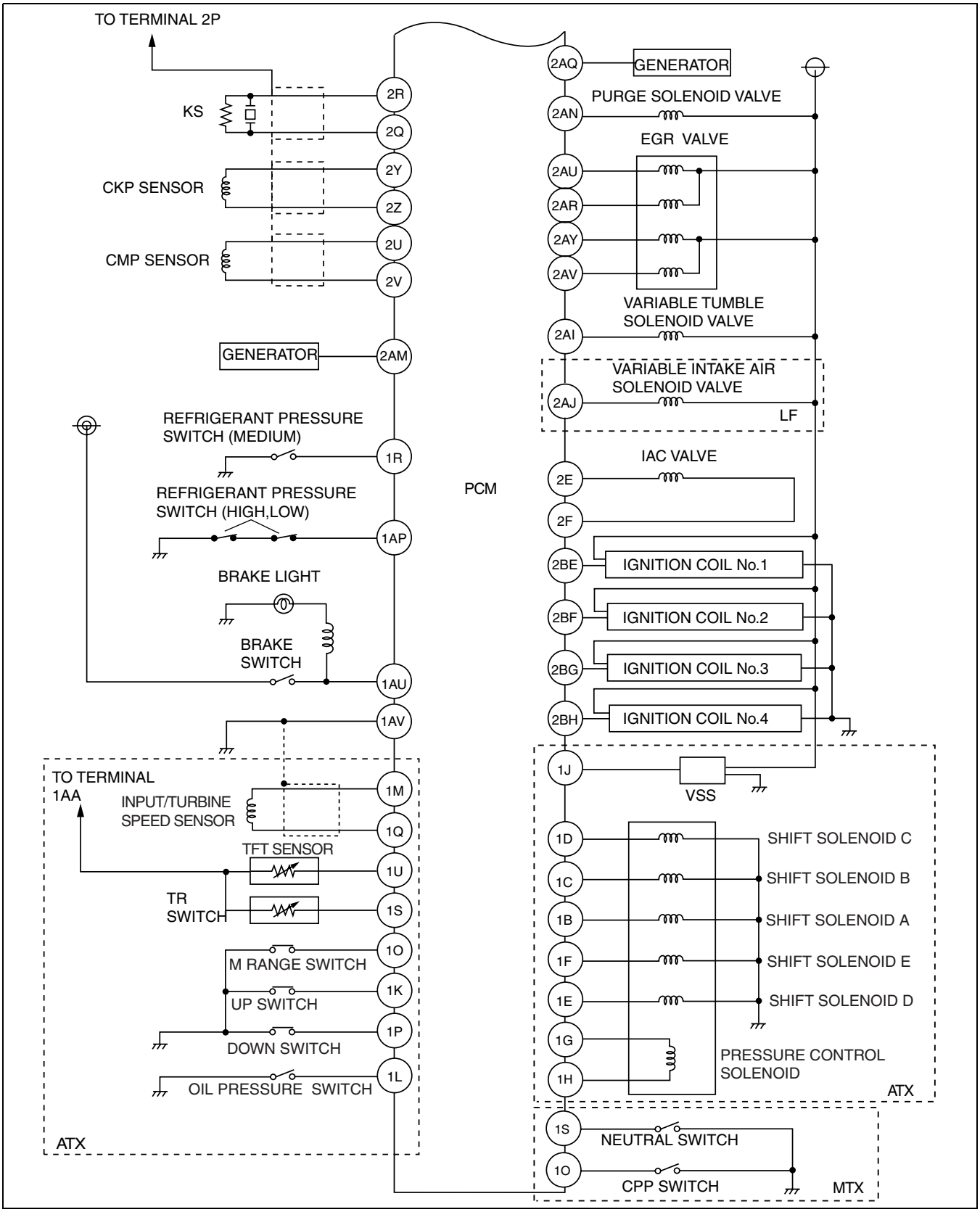

DPE102ZW2003

FOREWORD [FN4A-EL]

DPE050300000W01

- Refer to 00-00 section and thoroughly read and understand the basic flow of troubleshooting in order to properly perform the procedures.

BASIC INSPECTION [FN4A-EL]

DPE050300000W02

STEP	INSPECTION		ACTION
1	Perform the mechanical system test. (See 05–17–3 MECHANICAL SYSTEM TEST [FN4A-EL].) Is the mechanical system normal?	Yes	Go to the next step.
		No	Repair or replace any malfunctioning parts according to the inspection result.
2	Turn the ignition switch to the ON position. When the selector lever is moved, does the gear position indicator light indication correspond to the selector lever position? Also, when other ranges are selected from N or P during idling, does the vehicle move **within 1—2 s**?	Yes	Go to the next step.
		No	Inspect the selector lever and TR switch. Repair or replace malfunctioning parts. (See 05–18–3 SELECTOR LEVER INSPECTION.) (See 05–17–9 TRANSAXLE RANGE (TR) SWITCH INSPECTION [FN4A-EL].) If the selector lever and TR switch are normal, go to the next step.
3	Inspect the ATF color and condition. (See 05–17–7 AUTOMATIC TRANSAXLE FLUID (ATF) INSPECTION [FN4A-EL].) Are the ATF color and odor normal?	Yes	Go to the next step.
		No	Repair or replace any malfunctioning parts according to the inspection result. Flush the ATX and cooler line if necessary.
4	Perform the line pressure test. (See 05–17–3 Line Pressure Test.) Is the line pressure normal?	Yes	Go to the next step.
		No	Adjust the accelerator cable if necessary. Repair or replace any malfunctioning parts according to the inspection result.
5	Perform the stall test. (See 05–17–4 Stall Test.) Is the stall speed normal?	Yes	Go to the next step.
		No	Repair or replace any malfunctioning parts according to the inspection result.
6	Inspect the value at the following PCM PIDs using the WDS or equivalent. (See 01–40A–7 PCM INSPECTION [L8, LF].) • TFT • TFTV • VPWR • TR • TR_SENS • MNL SW • DWN SW • UP SW • ECT • TCS • RPM • TP • TSS • OSS Are the PID values normal?	Yes	Perform the symptom troubleshooting and follow the procedures.
		No	Repair or replace any malfunctioning parts according to the inspection result.

SYMPTOM TROUBLESHOOTING ITEM TABLE [FN4A-EL]

DPE050300000W03

- Use the chart below to verify the symptoms of the trouble in order to diagnose the appropriate area.

No.	TROUBLESHOOTING ITEM	DESCRIPTION	PAGE
1	Vehicle does not move in D, M ranges, or in R position	Vehicle does not move when accelerator pedal is depressed.	(See 05–03–9 NO.1 VEHICLE DOES NOT MOVE IN D, M RANGES, OR IN R POSITION [FN4A-EL].)
2	Vehicle moves in N position	Vehicle creeps in N position. Vehicle creeps if brake pedal is not depressed in N position.	(See 05–03–10 NO.2 VEHICLE MOVES IN N POSITION [FN4A-EL].)
3	Vehicle moves in P position, or parking gear does not disengage when P position is disengaged	Vehicle rolls when on a downward slope and tires do not lock in P position. Tires locked when P position is disengaged, vehicle does not move in D, M ranges, and R position when accelerator pedal is depressed, and engine remains in stalled condition.	(See 05–03–11 NO.3 VEHICLE MOVES IN P POSITION, OR PARKING GEAR DOES NOT DISENGAGE WHEN P IS DISENGAGED [FN4A-EL].)
4	Excessive creep	Vehicle accelerates in D, M ranges and R position when accelerator pedal is not depressed.	(See 05–03–11 NO.4 EXCESSIVE CREEP [FN4A-EL].)

No.	TROUBLESHOOTING ITEM	DESCRIPTION	PAGE
5	No creep at all	Vehicle does not move in D, M ranges, or R position when idling on flat paved road.	(See 05–03–11 NO.5 NO CREEP AT ALL [FN4A-EL].)
6	Low maximum speed and poor acceleration	Vehicle acceleration is poor at start. Delayed acceleration when accelerator pedal is depressed while driving.	(See 05–03–12 NO.6 LOW MAXIMUM SPEED AND POOR ACCELERATION [FN4A-EL].)
7	No shifting	Single shift range only. Sometimes shifts correctly.	(See 05–03–14 NO.7 NO SHIFTING [FN4A-EL].)
8	Does not shift to 4GR	Vehicle does not upshift from 3GR to 4GR even though vehicle speed is increased. Vehicle does not shift to 4GR even though accelerator pedal is released in D range at **60 km/h {37 mph}**.	(See 05–03–15 NO.8 DOES NOT SHIFT TO 4GR [FN4A-EL].)
9	Abnormal shifting	Shifts incorrectly (incorrect shift pattern).	(See 05–03–17 NO.9 ABNORMAL SHIFTING [FN4A-EL].)
10	Frequent shifting	Downshifting occurs suddenly even when accelerator pedal is depressed slightly in D range.	(See 05–03–18 NO.10 FREQUENT SHIFTING [FN4A-EL].)
11	Shift point is high or low	Shift point considerably different from automatic shift diagram. Shift delays when accelerating. Shift occurs suddenly when accelerating and engine speed does not increase.	(See 05–03–18 NO.11 SHIFT POINT IS HIGH OR LOW [FN4A-EL].)
12	Torque converter clutch (TCC) non-operation	TCC does not operate when vehicle reaches TCC operation range.	(See 05–03–18 NO.12 TORQUE CONVERTER CLUTCH (TCC) NON-OPERATION [FN4A-EL].)
13	No kickdown	Does not downshift when accelerator pedal is fully depressed within kickdown range.	(See 05–03–19 NO.13 NO KICKDOWN [FN4A-EL].)
14	Engine flares up or slips when upshifting or downshifting	When accelerator pedal is depressed, engine speed increases normally but vehicle speed increases slowly. When accelerator pedal is depressed while driving, engine speed increases but vehicle speed does not.	(See 05–03–20 NO.14 ENGINE FLARES UP OR SLIPS WHEN UPSHIFTING OR DOWNSHIFTING [FN4A-EL].)
15	Engine flares up or slips when accelerating vehicle	Engine flares up when accelerator pedal is depressed for upshifting. Engine flares up suddenly when accelerator pedal is depressed for downshifting.	(See 05–03–20 NO.15 ENGINE FLARES UP OR SLIPS WHEN ACCELERATING VEHICLE [FN4A-EL].)
16	Judder upon torque converter clutch (TCC) operation	Vehicle jolts when TCC is engaged.	(See 05–03–21 NO.16 JUDDER UPON TORQUE CONVERTER CLUTCH (TCC) OPERATION [FN4A-EL].)
17	Excessive shift shock from N to D or N to R position/range	Strong shock is felt when shifting from N to D or N to R position/range at idle.	(See 05–03–22 NO.17 EXCESSIVE SHIFT SHOCK FROM N TO D OR N TO R POSITION/RANGE [FN4A-EL].)
18	Excessive shift shock is given when upshifting and downshifting	Excessive shift shock is felt when depressing accelerator pedal to accelerate at upshifting. During cruising, excessive shift shock is felt when depressing accelerator pedal at downshifting.	(See 05–03–24 NO.18 EXCESSIVE SHIFT SHOCK IS FELT WHEN UPSHIFTING AND DOWNSHIFTING [FN4A-EL].)
19	Excessive shift shock on torque converter clutch (TCC)	Strong shock is felt when TCC is engaged.	(See 05–03–25 NO.19 EXCESSIVE SHIFT SHOCK ON TORQUE CONVERTER CLUTCH (TCC) [FN4A-EL].)
20	Noise occurs at idle when vehicle is stopped in all positions/ranges	Transaxle is noisy in all positions and ranges when vehicle idling.	(See 05–03–26 NO.20 NOISE OCCURS AT IDLE WHEN VEHICLE IS STOPPED IN ALL POSITIONS/RANGES [FN4A-EL].)

No.	TROUBLESHOOTING ITEM	DESCRIPTION	PAGE
21	Noise occurs at idle when vehicle is stopped in D, M ranges, or in R position	Transaxle is noisy in driving ranges when vehicle is idling.	(See 05–03–26 NO.21 NOISE OCCURS AT IDLE WHEN VEHICLE IS STOPPED IN D, M RANGES, OR IN R POSITION [FN4A-EL].)
22	No engine braking in 1GR position of M range	Engine speed drops to idle but vehicle coasts when accelerator pedal is released when in M range (1GR) at low vehicle speed.	(See 05–03–26 NO.22 NO ENGINE BRAKING IN 1GR POSITION OF M RANGE [FN4A-EL].)
23	Transaxle overheats	Burnt smell emitted from the transaxle. Smoke is emitted from the transaxle.	(See 05–03–27 NO.23 TRANSAXLE OVERHEATS [FN4A-EL].)
24	Engine stalls when shifted to D, M ranges, or in R position	Engine stalls when shifting from N or P position to D, M ranges or R position at idle.	(See 05–03–28 NO.24 ENGINE STALLS WHEN SHIFTED TO D, M RANGES, OR IN R POSITION [FN4A-EL].)
25	Engine stalls when driving at slow speeds or stopping	Engine stalls when brake pedal is depressed while driving at low speed or stopping.	(See 05–03–28 NO.25 ENGINE STALLS WHEN DRIVING AT SLOW SPEEDS OR STOPPING [FN4A-EL].)
26	Starter does not work	Starter does not work even when in P or N position.	(See 05–03–29 NO.26 STARTER DOES NOT WORK [FN4A-EL].)
27	Gear position indicator light does not illuminate in M range	Gear position indicator light in instrument cluster does not illuminate in M range with ignition switch at ON.	(See 05–03–29 NO.27 GEAR POSITION INDICATOR LIGHT DOES NOT ILLUMINATE IN M RANGE [FN4A-EL].)
28	Gear position indicator light illuminates in D range or P, N, R positions	Gear position indicator light in instrument cluster illuminates in D range or P, N, R positions with ignition switch at ON.	(See 05–03–29 NO.28 GEAR POSITION INDICATOR LIGHT ILLUMINATES IN D RANGE OR P, N, R POSITIONS [FN4A-EL].)
29	Does not upshift in M range	Gear position indicator light in instrument cluster illuminates but vehicle does not upshift when selector lever is pushed to “+” side.	(See 05–03–30 NO.29 DOES NOT UPSHIFT IN M RANGE [FN4A-EL].)
30	Does not downshift in M range	Gear position indicator light in instrument cluster illuminates but vehicle does not downshift when selector lever is pushed to “–” side.	(See 05–03–30 NO.30 DOES NOT DOWNSHIFT IN M RANGE [FN4A-EL].)

QUICK DIAGNOSIS CHART [FN4A-EL]

DPE050300000W04

X : Applied

No.	Item / Symptom	Selector lever mis-adjusted	Parking mechanism malfunction	Not within line pressure specification	Not within idle speed specification	Excessive amount of ATF	Electrical system components							
							ATX outer parts							
	Cause of trouble						TP sensor		Input/turbine speed sensor		VSS		ECT sensor	
							No signal input	Abnormal signal input	No signal input	Abnormal signal input	No signal input	Abnormal signal input	No signal input	Abnormal signal input
1	Vehicle does not move in D, M ranges, or in R position	X		X		X								
2	Vehicle moves in N position	X												
3	Vehicle moves in P position, or parking gear does not disengage when P is disengaged	X												
4	Excessive creep		X		X	X								
5	No creep at all			X		X	X	X	X	X	X	X		
6	Low maximum speed and poor acceleration		X	X			X	X	X	X	X	X		
7	No shifting			X			X	X	X	X	X	X		
8	Does not shift to 4GR	X		X			X	X	X	X	X	X	X	X
9	Abnormal shifting	X		X		X	X	X	X	X	X	X		
10	Frequent shifting			X			X	X	X	X	X	X		
11	Shift point is high or low					X	X	X	X	X	X	X		
12	Torque converter clutch (TCC) non-operation					X	X	X	X	X	X	X	X	X
13	No kickdown						X	X						
14	Engine flares up or slips when upshifting or downshifting	X		X			X	X	X	X	X	X		
15	Engine flares up or slips when accelerating vehicle	X		X			X	X	X	X	X	X		
16	Judder upon torque converter clutch (TCC) operation			X			X	X	X	X	X	X		
17	Excessive shift shock from N to D or N to R position/range	X		X	X		X	X	X	X	X	X		
18	Excessive shift shock is felt when upshifting and downshifting			X			X	X	X	X	X	X		
19	Excessive shift shock on torque converter clutch (TCC)			X			X	X	X	X	X	X		
20	Noise occurs at idle when vehicle is stopped in all positions/ranges													
21	Noise occurs at idle when vehicle is stopped in D, M ranges, or in R position													
22	No engine braking in 1GR position of M range			X			X	X	X	X	X	X		
23	Transaxle overheats			X		X								
24	Engine stalls when shifted to D, M ranges, or in R position				X				X	X				
25	Engine stalls when driving at slow speeds or stopping				X									
26	Starter does not work													
27	Gear position indicator light does not illuminate in M range													
28	Gear position indicator light illuminates in D range or P, N, R positions													
29	Does not upshift in M range													
30	Does not downshift in M range													

B3E0503W001

05

X : Applied

No.	Item / Symptom	Electrical system components												
		ATX outer parts												
		TR switch		M range switch		Up switch		Down switch		Brake switch		TFT sensor		
	Cause of trouble	Mis-adjusted	Not operating properly	No signal input	Abnormal signal input	No signal input	Abnormal signal input	No signal input	Abnormal signal input	Always ON	Poor GND	No signal input	Malfunction signal input	Shift solenoid D malfunction
1	Vehicle does not move in D, M ranges, or in R position					X					X			X
2	Vehicle moves in N position													
3	Vehicle moves in P position, or parking gear does not disengage when P is disengaged													
4	Excessive creep													
5	No creep at all				X	X					X		X	X
6	Low maximum speed and poor acceleration	X	X	X	X	X					X	X	X	X
7	No shifting					X					X			X
8	Does not shift to 4GR	X	X	X	X						X	X	X	
9	Abnormal shifting	X	X			X					X			X
10	Frequent shifting										X			
11	Shift point is high or low										X			
12	Torque converter clutch (TCC) non-operation	X	X	X	X					X	X	X	X	
13	No kickdown					X					X			X
14	Engine flares up or slips when upshifting or downshifting	X	X			X					X			X
15	Engine flares up or slips when accelerating vehicle	X	X		X	X					X		X	X
16	Judder upon torque converter clutch (TCC) operation				X						X		X	
17	Excessive shift shock from N to D or N to R position/range				X	X					X		X	X
18	Excessive shift shock is felt when upshifting and downshifting			X	X	X					X	X	X	X
19	Excessive shift shock on torque converter clutch (TCC)										X		X	
20	Noise occurs at idle when vehicle is stopped in all positions/ranges				X									
21	Noise occurs at idle when vehicle is stopped in D, M ranges, or in R position													
22	No engine braking in 1GR position of M range					X					X			X
23	Transaxle overheats			X	X							X	X	
24	Engine stalls when shifted to D, M ranges, or in R position													
25	Engine stalls when driving at slow speeds or stopping													
26	Starter does not work	X	X											
27	Gear position indicator light does not illuminate in M range			X										
28	Gear position indicator light illuminates in D range or P, N, R positions				X									
29	Does not upshift in M range			X		X	X							
30	Does not downshift in M range			X				X	X					

B3E0503W002

X : Applied

No.	Item	Electrical system components / ATX inner parts					Hydraulic system components					Powertrain system			
	Symptom / Cause of trouble	Shift solenoid E malfunction	Shift solenoid A malfunction	Shift solenoid B malfunction	Shift solenoid C malfunction	Pressure control solenoid malfunction	Control valve is not operating properly	Forward accumulator is not operating properly	Servo apply accumulator is not operating properly	Pressure switch malfunction	Oil cooler is not operating properly	Slipping (Brake, clutch)	Burnt (Brake, clutch)	Torque converter is not operating properly	TCC burnt Inspection method
1	Vehicle does not move in D, M ranges, or in R position	X	X	X		X	X					X	X	X	
2	Vehicle moves in N position						X						X		
3	Vehicle moves in P position, or parking gear does not disengage when P is disengaged														
4	Excessive creep														
5	No creep at all		X	X	X	X	X					X	X	X	
6	Low maximum speed and poor acceleration	X	X	X	X	X	X					X	X	X	X
7	No shifting	X	X	X	X	X	X					X	X		
8	Does not shift to 4GR	X	X	X			X					X	X		
9	Abnormal shifting	X	X	X	X		X	X	X			X	X	X	
10	Frequent shifting											X	X		
11	Shift point is high or low											X			
12	Torque converter clutch (TCC) non-operation	X	X				X							X	X
13	No kickdown	X	X	X	X		X					X	X		
14	Engine flares up or slips when upshifting or downshifting	X	X	X	X	X	X					X	X		
15	Engine flares up or slips when accelerating vehicle	X	X		X	X	X					X	X		
16	Judder upon torque converter clutch (TCC) operation	X	X				X							X	X
17	Excessive shift shock from N to D or N to R position/range		X	X	X	X	X	X	X	X			X		
18	Excessive shift shock is felt when upshifting and downshifting	X	X	X	X	X	X	X	X	X		X	X		
19	Excessive shift shock on torque converter clutch (TCC)	X	X			X	X							X	X
20	Noise occurs at idle when vehicle is stopped in all positions/ranges														
21	Noise occurs at idle when vehicle is stopped in D, M ranges, or in R position														
22	No engine braking in 1GR position of M range	X			X		X					X	X		
23	Transaxle overheats						X				X				X
24	Engine stalls when shifted to D, M ranges, or in R position						X							X	X
25	Engine stalls when driving at slow speeds or stopping						X							X	X
26	Starter does not work														
27	Gear position indicator light does not illuminate in M range														
28	Gear position indicator light illuminates in D range or P, N, R positions														
29	Does not upshift in M range														
30	Does not downshift in M range														

B3E0503W003

NO.1 VEHICLE DOES NOT MOVE IN D, M RANGES, OR IN R POSITION [FN4A-EL]

DPE050300000W05

1	Vehicle does not move in D, M ranges, or in R position
DESCRIPTION	• Vehicle does not move when the accelerator pedal is depressed.

05

POSSIBLE CAUSE	• If the vehicle does not move in D, M ranges or R position, basically, the malfunction is in the ATX. (Vehicle will move even with a malfunction in the PCM.) Since a malfunction is in the sensor circuit or output circuit is the cause of the malfunction in the ATX, inspect the sensors, output circuit, and the related wiring harnesses. 1. Clutch slippage, worn (D, M ranges-Forward clutch, R position-Reverse clutch, Low and reverse brake) • Line pressure low • Shift solenoid D malfunction • Shift solenoid E malfunction • Shift solenoid A malfunction • Shift solenoid B malfunction • Pressure control solenoid malfunction • Body GND malfunction • Control valve body malfunction 2. Selector lever malfunction 3. Improper operation of parking mechanism 4. Torque converter malfunction **Note** • Before following the troubleshooting steps, make sure that the Automatic Transaxle On-Board Diagnostic and Automatic Transaxle Basic Inspection are conducted.

Diagnostic procedure

STEP	INSPECTION		ACTION
1	When the vehicle is stopped on a flat, level road and the engine is off, does the vehicle move when pushed? (in D range or N, R positions with the brake pedal released)	Yes	Go to the next step.
		No	Inspect for parking mechanism. (See ATX workshop manual (FN4A-EL).)
2	Disconnect the PCM connector. Is the resistance between the ground terminal at the PCM connector and the body ground **less than 5.0 ohms**?	Yes	Go to the next step.
		No	Repair open ground circuit.
3	Inspect LPS PID value using the WDS or equivalent. Is the LPS PID value normal? (See 01–40A–7 PCM INSPECTION [L8, LF].)	Yes	Overhaul the control valve body and repair or replace any malfunctioning parts. (See ATX workshop manual (FN4A-EL).) If any problem remains, overhaul the transaxle and repair or replace any malfunctioning parts. (See ATX workshop manual (FN4A-EL).)
		No	Repair or replace any malfunctioning parts.
4	• Verify the test results. — If normal, return to the diagnostic index to service any additional symptoms. — If the malfunction remains, inspect the related Service information and perform repair or diagnosis. • If the vehicle is repaired, troubleshooting is completed. • If the vehicle is not repaired or additional diagnostic information is not available, replace the PCM.		

NO.2 VEHICLE MOVES IN N POSITION [FN4A-EL]

DPE050300000W06

2	Vehicle moves in N position
DESCRIPTION	• Vehicle creeps in N position. • Vehicle creeps if brake pedal is not depressed in N position.
POSSIBLE CAUSE	• If the vehicle moves in N position, basically, the malfunction is in the ATX. Since a malfunction in the sensor circuit or output circuit is the cause of the malfunction in the ATX, inspect the sensors, output circuit, and the related wiring harnesses. 1. Clutch burnt (Forward clutch) • Control valve body malfunction 2. Selector lever position disparity (Although the selector indicator shows N position, the hydraulic circuit shows D range or R position) **Note** • Before following the troubleshooting steps, make sure that the Automatic Transaxle On-Board Diagnostic and Automatic Transaxle Basic Inspection are conducted.

Diagnostic procedure

STEP	INSPECTION		ACTION
1	Does the vehicle creep when the selector lever is moved slightly in N position?	Yes	Go to the next step.
		No	Adjust the selector lever. (See 05–18–4 SELECTOR CABLE ADJUSTMENT.)
2	Disconnect the PCM connector. Is the resistance between the ground terminal at the PCM connector and the body ground **less than 5.0 ohms**?	Yes	Go to the next step.
		No	Repair open ground circuit. Reconnect the PCM.
3	Inspect LPS PID value using the WDS or equivalent. Is the LPS PID value normal? (See 01–40A–7 PCM INSPECTION [L8, LF].)	Yes	Overhaul the control valve body and repair or replace any malfunctioning parts. (See ATX workshop manual (FN4A-EL).) If any problem remains, overhaul the transaxle and repair or replace any malfunctioning parts. (See ATX workshop manual (FN4A-EL).)
		No	Repair or replace any malfunctioning parts.
4	• Verify the test results. — If normal, return to the diagnostic index to service any additional symptoms. — If the malfunction remains, inspect the related Service information and perform repair or diagnosis. • If the vehicle is repaired, troubleshooting is completed. • If the vehicle is not repaired or additional diagnostic information is not available, replace the PCM.		

NO.3 VEHICLE MOVES IN P POSITION, OR PARKING GEAR DOES NOT DISENGAGE WHEN P IS DISENGAGED [FN4A-EL]

DPE050300000W07

3	**Vehicle moves in P position, or parking gear does not disengage when P is disengaged**
DESCRIPTION	• Vehicle rolls on a downward slope in P position. • Tires are locked when P is disengaged. Vehicle does not move in D, M ranges, and R position when the accelerator pedal is depressed, and the engine remains in a stalled condition.
POSSIBLE CAUSE	1. Parking mechanism malfunction (May have effect on noise or shock from transaxle) 2. Improper adjustment of selector lever 3. If vehicle moves in N position, perform No.2 “VEHICLE MOVES IN N POSITION”

NO.4 EXCESSIVE CREEP [FN4A-EL]

DPE050300000W08

4	**Excessive creep**
DESCRIPTION	• Vehicle accelerates in D, M ranges and R position when accelerator pedal is not depressed.
POSSIBLE CAUSE	1. Engine idle speed is high (transaxle system is not cause of problem) 2. (See 01–03A–25 NO.9 FAST IDLE/RUNS ON [L8, LF].)

NO.5 NO CREEP AT ALL [FN4A-EL]

DPE050300000W09

5	**No creep at all**
DESCRIPTION	• Vehicle does not move in D, M ranges and R position when idling on a flat paved road.

POSSIBLE CAUSE	• Either transaxle is stuck in 3GR or 4GR position, or there is clutch circuit slippage due to a stuck 3–4 clutch. 1. Clutch burnt • Line pressure low • Shift solenoid D malfunction • Shift solenoid A malfunction • Shift solenoid B malfunction • Shift solenoid C malfunction • Pressure control solenoid malfunction • Body GND malfunction • Control valve body malfunction 2. Transaxle fixed in 3GR (Operation of fail-safe function) • Short or open circuit in wiring harness • Poor connection of connector • Malfunction of electronic parts of output and input system 3. There is no engine torque • Torque converter malfunction **Note** • Before following the troubleshooting steps, make sure that the Automatic Transaxle On-Board Diagnostic and Automatic Transaxle Basic Inspection are conducted.

Diagnostic procedure

STEP	INSPECTION		ACTION
1	Does the vehicle creep in any range/position?	Yes	Go to the next step.
		No	Inspect or adjust the selector lever. (See 05–18–5 SELECTOR LEVER COMPONENT REMOVAL/INSTALLATION.)
2	Inspect the value at the following PCM PID using the WDS or equivalent. (See 01–40A–7 PCM INSPECTION [L8, LF].) • TP Is the PID value normal?	Yes	Go to the next step.
		No	Repair or replace any malfunctioning parts.
3	Disconnect the PCM connector. Is the resistance between the ground terminal at the PCM connector and the body ground **less than 5.0 ohms**?	Yes	Go to the next step.
		No	Repair open ground circuit.
4	Inspect the LPS PID value. Is the LPS PID value normal? (See 01–40A–7 PCM INSPECTION [L8, LF].)	Yes	Overhaul the control valve body and repair or replace any malfunctioning parts. (See ATX workshop manual (FN4A-EL).) If any problem remains, overhaul the transaxle and repair or replace any malfunctioning parts. (See ATX workshop manual (FN4A-EL).)
		No	Repair or replace any malfunctioning parts.
5	• Verify the test results. — If normal, return to the diagnostic index to service any additional symptoms. — If the malfunction remains, inspect the related Service information and perform repair or diagnosis. • If the vehicle is repaired, troubleshooting is completed. • If the vehicle is not repaired or additional diagnostic information is not available, replace the PCM.		

NO.6 LOW MAXIMUM SPEED AND POOR ACCELERATION [FN4A-EL]

DPE050300000W10

6	Low maximum speed and poor acceleration
DESCRIPTION	• Vehicle acceleration is poor at start. • Delayed acceleration when accelerator pedal is depressed while driving.

POSSIBLE CAUSE	• If the clutch is stuck or does not stay in 3GR, the malfunction is in the engine circuit. 1. Clutch slippage, burnt • Line pressure low • Shift solenoid D malfunction • Shift solenoid E malfunction • Shift solenoid A malfunction • Shift solenoid B malfunction • Shift solenoid C malfunction • Pressure control solenoid malfunction • Body GND malfunction • Control valve body malfunction 2. Signal malfunction • Vehicle speed sensor malfunction • Sensor GND malfunction • TP sensor malfunction • Input/turbine speed sensor malfunction 3. Transaxle fixed in 3GR (Operation of fail-safe function) • Short or open circuit in wiring harness • Poor connection of connector • Malfunction of electronic parts of output and input system 4. Transaxle fixed in 4GR (Operation of fail-safe function) • Forward clutch slippage • Vehicle speed sensor malfunction • Shift solenoid A malfunction (Stuck on) • Poor connection of connector 5. Insufficient starting torque (Suspected when in-gear condition, shift control and engine circuit are normal) • Torque converter malfunction (Poor operation, stuck) 6. Engagement of TCC operation range (Operation of fail-safe function) • Transaxle fluid temperature sensor malfunction (Short or open circuit) 7. Transaxle fixed in M range • M range switch malfunction 8. TR switch adjustment incorrect **Note** • Before following the troubleshooting steps, make sure that the Automatic Transaxle On-Board Diagnostic and Automatic Transaxle Basic Inspection are conducted.

Diagnostic procedure

STEP	INSPECTION		ACTION
1	With the ignition switch at the ON position, does the gear position indicator light indication correspond to the selector lever position?	Yes	Go to the next step.
		No	Go to No.27 “GEAR POSITION INDICATOR LIGHT DOES NOT ILLUMINATE IN M RANGE” or No.28 “GEAR POSITION INDICATOR LIGHT ILLUMINATES IN D RANGE OR P, N, R POSITIONS”
2	Go to No.12 “LACK/LOSS OF POWER”. (See 01–03A–32 NO.12 LACK/LOSS OF POWER-ACCELERATION/CRUISE [L8, LF].) Is the CIS system normal?	Yes	Go to the next step.
		No	Repair or replace any malfunctioning parts.
3	Disconnect the solenoid connector. Does the vehicle operate as follows? **D range: 3GR (fixed)** **R position: Reverse**	Yes	Go to the next step.
		No	Overhaul the control valve body and repair or replace any malfunctioning parts. (See ATX workshop manual (FN4A-EL).) If any problem remains, overhaul the transaxle and repair or replace any malfunctioning parts. (See ATX workshop manual (FN4A-EL).)
4	Drive the vehicle in D range. Does the vehicle start from stop in first gear?	Yes	Go to the next step.
		No	Inspect the value at the following PCM PIDs using the WDS or equivalent. (See 01–40A–7 PCM INSPECTION [L8, LF].) • TP • OSS • TSS • TR Repair or replace any malfunctioning parts.
5	Inspect the value at the following PCM PIDs using the WDS or equivalent. (See 01–40A–7 PCM INSPECTION [L8, LF].) • SSA/SS1 • SSB/SS2 • SSC/SS3 Are the PID values normal?	Yes	Go to the next step.
		No	Inspect the value at the following PCM PIDs using the WDS or equivalent. (See 01–40A–7 PCM INSPECTION [L8, LF].) • TP • OSS • TSS Repair or replace any malfunctioning parts.
6	Perform the stall test. (See 05–17–4 Stall Test.) Is stall speed normal?	Yes	Reverify symptoms of malfunction.
		No	Overhaul the transaxle and repair or replace any malfunctioning parts. (See ATX workshop manual (FN4A-EL).)
7	• Verify the test results. — If normal, return to the diagnostic index to service any additional symptoms. — If the malfunction remains, inspect the related Service information and perform repair or diagnosis. • If the vehicle is repaired, troubleshooting is completed. • If the vehicle is not repaired or additional diagnostic information is not available, replace the PCM.		

NO.7 NO SHIFTING [FN4A-EL]

DPE050300000W11

7	No shifting
DESCRIPTION	• Single shift range only. • Sometimes it shifts correctly.

POSSIBLE CAUSE	• When the gear position is fixed in 3GR due to the fail-safe operation, the malfunction is in the ATX. • Perform malfunction diagnosis according to No.6 “Low maximum speed and poor acceleration”. 1. Clutch slippage, burnt • Line pressure low • Shift solenoid D malfunction • Shift solenoid E malfunction • Shift solenoid A malfunction • Shift solenoid B malfunction • Shift solenoid C malfunction • Pressure control solenoid malfunction • Body GND malfunction • Control valve body malfunction 2. Signal malfunction • Vehicle speed sensor malfunction • Sensor GND malfunction • TP sensor malfunction • Input/turbine speed sensor malfunction 3. Transaxle fixed in 3GR (Operation of fail-safe function) • Short or open circuit in wiring harness • Poor connection of connector • Disconnected shift solenoid connector • Poor ground of shift solenoid 4. Transaxle fixed in 4GR (Operation of fail-safe function) • Forward clutch slippage • Vehicle speed sensor malfunction • Shift solenoid A malfunction (Stuck on) • Poor connection of connector 5. Transaxle fixed in M range • M range switch malfunction

NO.8 DOES NOT SHIFT TO 4GR [FN4A-EL]

DPE050300000W12

8	**Does not shift to 4GR**
DESCRIPTION	• Vehicle does not upshift from 3GR to 4GR even though vehicle speed is increased. • Vehicle does not shift to 4GR even though accelerator pedal is released in D range at **60 km/h {37 mph}**.

8	Does not shift to 4GR
POSSIBLE CAUSE	• Basically, TCC does not operate when the fail-safe is operating. Verify the DTCs first. If the TCC operates when driving at high speeds only, the malfunction (improper adjustment) is in the TR switch circuit. **Caution** • **If the TCC is stuck, inspect it. In addition, inspect the oil cooler for foreign particles which may have mixed in with the ATF.** 1. TCC piston slippage, burned • Line pressure low • TP sensor malfunction • Engine coolant temperature sensor malfunction • Vehicle speed sensor malfunction • Input/turbine speed sensor malfunction • Sensor GND malfunction 2. Transaxle fluid temperature sensor malfunction • Short or open circuit in wiring harness • Poor connection of connector • Sensor malfunction 3. TR switch malfunction • Short or open circuit in wiring harness • Poor connection of connector • Sensor malfunction • Selector lever adjustment incorrect • TR switch adjustment incorrect 4. Shift solenoid A, shift solenoid B, shift solenoid D valve malfunction • Short or open circuit in wiring harness • Poor connection of connector • Solenoid valve stuck 5. M range switch malfunction 6. Control valve body malfunction **Note** • Before following the troubleshooting steps, make sure that the Automatic Transaxle On-Board Diagnostic and Automatic Transaxle Basic Inspection are conducted.

Diagnostic procedure

STEP	INSPECTION		ACTION
1	With the ignition switch at the ON position, does the gear position indicator light indication correspond to the selector lever position?	Yes	Go to the next step.
		No	Go to No.27 “GEAR POSITION INDICATOR LIGHT DOES NOT ILLUMINATE IN M RANGE” or No. 28 “GEAR POSITION INDICATOR LIGHT ILLUMINATES IN D RANGE OR P, N, R POSITIONS”
2	Inspect the value at the following PCM PIDs using the WDS or equivalent. (See 01–40A–7 PCM INSPECTION [L8, LF].) • TFT • TFTV Are the PID values normal?	Yes	Go to the next step.
		No	Repair or replace any malfunctioning parts.
3	Inspect the value at the following PCM PIDs using the WDS or equivalent. (See 01–40A–7 PCM INSPECTION [L8, LF].) • SSA/SS1 • SSB/SS2 • SSC/SS3 Are the PID values normal?	Yes	Overhaul the control valve body and repair or replace any malfunctioning parts. (See ATX workshop manual (FN4A-EL).) If any problem remains, overhaul the transaxle and repair or replace any malfunctioning parts. (See ATX workshop manual (FN4A-EL).)
		No	Go to the next step.
4	Disconnect the PCM connector. Is the resistance between the ground terminal at the PCM connector and the body ground **less than 5.0 ohms**?	Yes	Inspect the value at the following PCM PIDs using the WDS or equivalent. (See 01–40A–7 PCM INSPECTION [L8, LF].) • TR • TSS • OSS Repair or replace any malfunctioning parts.
		No	Repair open ground circuit. Reconnect the PCM.
5	• Verify the test results. — If normal, return to the diagnostic index to service any additional symptoms. — If the malfunction remains, inspect the related Service information and perform repair or diagnosis. • If the vehicle is repaired, troubleshooting is completed. • If the vehicle is not repaired or additional diagnostic information is not available, replace the PCM.		

NO.9 ABNORMAL SHIFTING [FN4A-EL]

DPE050300000W13

05

9	Abnormal shifting
DESCRIPTION	• Shifts incorrectly (incorrect shift pattern).
POSSIBLE CAUSE	• There is a malfunction in the signal circuit which controls shifting (TP sensor, input/turbine speed sensor, vehicle speed sensor), the control valve is stuck, the accumulator (forward or servo apply) is stuck, or the clutch circuit is stuck. 1. Clutch slippage, burnt • Line pressure low • Control valve body malfunction • Shift solenoid D malfunction • Shift solenoid E malfunction • Shift solenoid A malfunction • Shift solenoid B malfunction • Shift solenoid C malfunction • Body GND malfunction • Accelerator cable mis-adjustment 2. Signal malfunction • Vehicle speed sensor malfunction • Sensor GND malfunction • TP sensor malfunction or mis-adjustment • Input/turbine speed sensor malfunction 3. TR switch malfunction • Selector lever adjustment incorrect • TR switch adjustment incorrect **Note** • Before following the troubleshooting steps, make sure that the Automatic Transaxle On-Board Diagnostic and Automatic Transaxle Basic Inspection are conducted.

Diagnostic procedure

STEP	INSPECTION		ACTION
1	Disconnect the PCM connector. Is the resistance between the ground terminal at the PCM connector and the body ground **less than 5.0 ohms**?	Yes	Go to the next step.
		No	Repair open ground circuit. Reconnect the PCM.
2	Inspect the value at the following PCM PIDs using the WDS or equivalent. (See 01–40A–7 PCM INSPECTION [L8, LF].) • TP • TSS • OSS Are the PID values normal?	Yes	Overhaul the control valve body and repair or replace any malfunctioning parts. (See ATX workshop manual (FN4A-EL).) If any problem remains, overhaul the transaxle and repair or replace any malfunctioning parts. (See ATX workshop manual (FN4A-EL).)
		No	Repair or replace any malfunctioning parts.
3	• Verify the test results. — If normal, return to the diagnostic index to service any additional symptoms. — If the malfunction remains, inspect the related Service information and perform repair or diagnosis. • If the vehicle is repaired, troubleshooting is completed. • If the vehicle is not repaired or additional diagnostic information is not available, replace the PCM.		

NO.10 FREQUENT SHIFTING [FN4A-EL]

DPE050300000W14

10	Frequent shifting
DESCRIPTION	• Downshifting occurs suddenly even when accelerator pedal is depressed slightly in D range.
POSSIBLE CAUSE	• The malfunctioning circuit is basically the same as No.9 “ABNORMAL SHIFTING”. However, a malfunction of the input signal to the TP sensor, input/turbine speed sensor, vehicle speed sensor (including the sensor GND, sensor wiring harness and connector), or clutch slippage (clutch stuck, low pressure in line) may also be the cause.

NO.11 SHIFT POINT IS HIGH OR LOW [FN4A-EL]

DPE050300000W15

11	Shift point is high or low
DESCRIPTION	• Shift point considerably different from automatic shift diagram. • Shift delays when accelerating. • Shift occurs quickly when accelerating and engine speed does not increase.
POSSIBLE CAUSE	• If the transaxle does not shift abnormally, there is a malfunction of the input signal to the TP sensor, input/turbine speed sensor, or vehicle speed sensor (including sensor GND). • If the engine speed is high or low, regardless of normal shifting, inspect the tachometer. • Verify that the output signal of the TP sensor changes linearly.

NO.12 TORQUE CONVERTER CLUTCH (TCC) NON-OPERATION [FN4A-EL]

DPE050300000W16

12	Torque converter clutch (TCC) non-operation
DESCRIPTION	• TCC does not operate when vehicle reaches TCC operation range.

POSSIBLE CAUSE	• Basically, the TCC does not operate when the fail-safe is operating. Verify the DTC first. **Caution** • **If the TCC is stuck, inspect it. In addition, inspect the oil cooler for foreign particles which may have mixed in with the ATF.** 1. TCC burnt (1) Input sensor system malfunction • Transaxle fluid temperature sensor • Vehicle speed sensor • Input/turbine speed sensor • Sensor GND (2) Output solenoid valve system malfunction (Sticking) • Shift solenoid E malfunction • Shift solenoid A malfunction (3) Control valve body malfunction system (Poor operation, stuck) • TCC hydraulic pressure system 2. TP sensor malfunction (Not operating linear) 3. Input/turbine speed sensor or vehicle speed sensor malfunction 4. Brake switch malfunction (Always ON) 5. ECT sensor malfunction **Note** • Before following the troubleshooting steps, make sure that the Automatic Transaxle On-Board Diagnostic and Automatic Transaxle Basic Inspection are conducted.

Diagnostic procedure

STEP	INSPECTION		ACTION
1	With the ignition switch at the ON position, does the gear position indicator light indication correspond to the selector lever position?	Yes	Go to the next step.
		No	Go to No.27 “GEAR POSITION INDICATOR LIGHT DOES NOT ILLUMINATE IN M RANGE” or No.28 “GEAR POSITION INDICATOR LIGHT ILLUMINATES IN D RANGE OR P, N, R POSITIONS”
2	Inspect the value at the following PCM PIDs using the WDS or equivalent. (See 01–40A–7 PCM INSPECTION [L8, LF].) • TP • OSS • TSS Are the PID values normal?	Yes	Go to the next step.
		No	Repair or replace any malfunctioning parts.
3	Disconnect the PCM connector. Is the resistance between the ground terminal at the PCM connector and the body ground **less than 5.0 ohms**?	Yes	Go to the next step.
		No	Repair the open ground circuit.
4	Inspect the resistance between shift solenoid A and E control circuit at the PCM connector and control valve body connector. Inspect resistance between shift solenoid A and E circuit at the PCM connector and control valve body connector. Are the resistances **less than 5.0 ohms**?	Yes	Go to the next step.
		No	Repair the shift solenoid A or E control. Reconnect the PCM.
5	Inspect the shift solenoid A and E. (See 05–17–23 SOLENOID VALVE INSPECTION [FN4A-EL].) Are the shift solenoids operating properly?	Yes	Replace the PCM.
		No	Overhaul the control valve body and repair or replace any malfunctioning parts. (See ATX workshop manual (FN4A-EL).) If any problem remains, overhaul the transaxle and repair or replace any malfunctioning parts.(See ATX workshop manual (FN4A-EL).)
6	• Verify the test results. — If normal, return to the diagnostic index to service any additional symptoms. — If the malfunction remains, inspect the related Service information and perform repair or diagnosis. • If the vehicle is repaired, troubleshooting is completed. • If the vehicle is not repaired or additional diagnostic information is not available, replace the PCM.		

NO.13 NO KICKDOWN [FN4A-EL]

DPE050300000W17

13	No kickdown
DESCRIPTION	• Does not downshift when accelerator pedal is fully depressed within kickdown range.

POSSIBLE CAUSE	• If transaxle does not downshift though shifting is normal, the malfunction is in the TP sensor circuit (including sensor GND, sensor wiring harness and connector).

NO.14 ENGINE FLARES UP OR SLIPS WHEN UPSHIFTING OR DOWNSHIFTING [FN4A-EL]

DPE050300000W18

14	**Engine flares up or slips when upshifting or downshifting**
DESCRIPTION	• When the accelerator pedal is depressed for driveaway, engine speed increases but vehicle speed increases slowly. • When the accelerator pedal is depressed while driving, engine speed increases but the vehicle does not.
POSSIBLE CAUSE	• There is clutch slippage because the clutch is stuck or the line pressure is low. 1. Clutch stuck, slippage (forward clutch, 3–4 clutch, 2–4 brake band, one-way clutch) • Line pressure low • Shift solenoid D malfunction • Shift solenoid E malfunction • Shift solenoid A malfunction • Shift solenoid B malfunction • Shift solenoid C malfunction • Pressure control solenoid malfunction • Body GND malfunction • Accelerator cable mis-adjustment • Control valve body malfunction 2. Signal malfunction • Vehicle speed sensor malfunction • Sensor GND malfunction • TP sensor malfunction or mis-adjustment • Input/turbine speed sensor malfunction 3. Poor operation of mechanical pressure • Selector lever position disparity • TR switch position disparity **Note** • Before following the troubleshooting steps, make sure that the Automatic Transaxle On-Board Diagnostic and Automatic Transaxle Basic Inspection are conducted.

Diagnostic procedure

STEP	INSPECTION		ACTION
1	Is shift point normal?	Yes	Go to the next step.
		No	Go to No.9 “ABNORMAL SHIFTING”.
2	Inspect the value at the following PCM PID using the WDS or equivalent. (See 01–40A–7 PCM INSPECTION [L8, LF].) • TP Is the PID value normal?	Yes	Go to the next step.
		No	Repair or replace any malfunctioning parts.
3	Disconnect the PCM connector. Is the resistance between the ground terminal at the PCM connector and the body ground **less than 5.0 ohms**?	Yes	Go to the next step.
		No	Repair the open ground circuit. Reconnect the PCM.
4	Inspect the LPS PID value. Is the LPS PID value normal? (See 01–40A–7 PCM INSPECTION [L8, LF].)	Yes	Overhaul the control valve body and repair or replace any malfunctioning parts. (See ATX workshop manual (FN4A-EL).) If any problem remains, overhaul the transaxle and repair or replace any malfunctioning parts. (See ATX workshop manual (FN4A-EL).)
		No	Repair or replace any malfunctioning parts.
5	• Verify the test results. — If normal, return to the diagnostic index to service any additional symptoms. — If the malfunction remains, inspect the related Service information and perform repair or diagnosis. • If the vehicle is repaired, troubleshooting is completed. • If the vehicle is not repaired or additional diagnostic information is not available, replace the PCM.		

NO.15 ENGINE FLARES UP OR SLIPS WHEN ACCELERATING VEHICLE [FN4A-EL]

DPE050300000W19

15	**Engine flares up or slips when accelerating the vehicle**
DESCRIPTION	• Engine flares up when the accelerator pedal is depressed for upshifting. • Engine flares up suddenly when the accelerator pedal is depressed for downshifting.

POSSIBLE CAUSE	• The malfunction is basically the same as for No.14 “ENGINE FLARES UP OR SLIPS WHEN UPSHIFTING OR DOWNSHIFTING”. If conditions for No.14 worsen, the malfunction will develop to No.15.

NO.16 JUDDER UPON TORQUE CONVERTER CLUTCH (TCC) OPERATION [FN4A-EL]

DPE050300000W20

16	**Judder upon torque converter clutch (TCC) operation**
DESCRIPTION	• Vehicle jolts when TCC is engaged.
POSSIBLE CAUSE	• Poor TCC engagement due to either slippage because the TCC is stuck or the line pressure is low **Caution** • **If the TCC is stuck, inspect it. In addition, inspect the oil cooler for foreign particles which may have mixed in with the ATF.** 1. Torque converter clutch piston slippage, burnt • Line pressure high • Shift solenoid A malfunction • Control valve body malfunction • Body GND malfunction • Pressure control solenoid malfunction 2. Signal malfunction • Vehicle speed sensor malfunction • Sensor GND malfunction • TFT sensor malfunction • TP sensor malfunction or mis-adjustment • Input/turbine speed sensor malfunction 3. Torque converter malfunction **Note** • Before following the troubleshooting steps, make sure that the Automatic Transaxle On-Board Diagnostic and Automatic Transaxle Basic Inspection are conducted.

Diagnostic procedure

STEP	INSPECTION		ACTION
1	Inspect the value at the following PCM PID using the WDS or equivalent. (See 01–40A–7 PCM INSPECTION [L8, LF].) • TSS Is the PID value normal?	Yes	Go to the next step.
		No	Repair or replace any malfunctioning parts.
2	Disconnect the PCM connector. Is the resistance between the ground terminal at the PCM connector and the body ground **less than 5.0 ohms**?	Yes	Go to the next step.
		No	Repair the open ground circuit.
3	Inspect the resistance between shift solenoid A control circuit at the PCM connector and control valve body connector. Inspect the resistance between shift solenoid A circuit at the PCM connector and control valve body connector. Are the resistances **less than 5.0 ohms**?	Yes	Go to the next step.
		No	Repair the shift solenoid A circuit.
4	Inspect the shift solenoid. (See 05–17–23 SOLENOID VALVE INSPECTION [FN4A-EL].) Is the solenoid valve operating properly?	Yes	Go to the next step.
		No	Overhaul the control valve body and repair or replace any malfunctioning parts. (See ATX workshop manual (FN4A-EL).) If any problem remains, overhaul the transaxle and repair or replace any malfunctioning parts. (See ATX workshop manual (FN4A-EL).)
5	Inspect the LPS PID value. Is the LPS PID value normal? (See 01–40A–7 PCM INSPECTION [L8, LF].)	Yes	Overhaul the control valve body and repair or replace any malfunctioning parts. (See ATX workshop manual (FN4A-EL).) If any problem remains, overhaul the transaxle and repair or replace any malfunctioning parts. (See ATX workshop manual (FN4A-EL).)
		No	Replace the PCM.
6	• Verify the test results. — If normal, return to the diagnostic index to service any additional symptoms. — If the malfunction remains, inspect the related Service information and perform repair or diagnosis. • If the vehicle is repaired, troubleshooting is completed. • If the vehicle is not repaired or additional diagnostic information is not available, replace the PCM.		

NO.17 EXCESSIVE SHIFT SHOCK FROM N TO D OR N TO R POSITION/RANGE [FN4A-EL]

DPE050300000W21

17	Excessive shift shock from N to D or N to R position/range
DESCRIPTION	• Strong shock felt when shifting from N to D or N to R position/range.

POSSIBLE CAUSE	• Shift shock may worsen when the fail-safe is operating. If no DTC is output, the shift shock may worsen due to poor operation of the control valve body or sticking of the clutch. 1. Clutch burnt (N→D: Forward clutch, N→R: Reverse clutch or low and reverse brake) • Line pressure low, high • TP sensor malfunction • Vehicle speed sensor malfunction • Input/turbine speed sensor malfunction • Shift solenoid B malfunction • Shift solenoid D malfunction • Shift solenoid A malfunction • Shift solenoid C malfunction • Pressure control solenoid malfunction • Accelerator cable mis-adjustment • Control valve body malfunction • Sensor GND malfunction • Body GND malfunction 2. Poor hydraulic operation (Malfunction in range change) • Forward accumulator malfunction • Servo apply accumulator malfunction • Pressure switch malfunction 3. Idle speed high 4. Poor tightening torque of engine mount, exhaust mount 5. Poor operation of mechanical pressure • Selector lever position disparity **Note** • Before following the troubleshooting steps, make sure that the Automatic Transaxle On-Board Diagnostic and Automatic Transaxle Basic Inspection are conducted.

Diagnostic procedure

STEP	INSPECTION		ACTION
1	Does the shift shock occur only when the engine is cold?	Yes	Go to the next step.
		No	Go to Step 3.
2	Disconnect the PCM connector. Is the resistance between the ground terminal at the PCM connector and the body ground **less than 5.0 ohms**?	Yes	Inspect the value at the following PCM PIDs using the WDS or equivalent. (See 01–40A–7 PCM INSPECTION [L8, LF].) • TP • TFT • TFTV Repair or replace any malfunctioning parts.
		No	Repair the open ground circuit. Reconnect the PCM.
3	Perform the stall test. (See 05–17–4 Stall Test.) Is the stall speed normal?	Yes	Go to the next step.
		No	Go to Step 5.
4	Inspect the value at the following PCM PID using the WDS or equivalent. (See 01–40A–7 PCM INSPECTION [L8, LF].) • TR Is the PID value normal?	Yes	Overhaul the control valve body and repair or replace any malfunctioning parts. (See ATX workshop manual (FN4A-EL).) If any problem remains, overhaul the transaxle and repair or replace any malfunctioning parts. (See ATX workshop manual (FN4A-EL).)
		No	Repair or replace any malfunctioning parts.
5	Inspect the value at the following PCM PID using the WDS or equivalent. (See 01–40A–7 PCM INSPECTION [L8, LF].) • TP Is the PID value normal?	Yes	Go to the next step.
		No	Repair or replace any malfunctioning parts.
6	Disconnect the PCM connector. Is the resistance between the ground terminal at the PCM connector and the body ground **less than 5.0 ohms**?	Yes	Go to the next step.
		No	Repair the open ground circuit. Reconnect the PCM.
7	Inspect LPS PID value. Is LPS PID value normal? (See 01–40A–7 PCM INSPECTION [L8, LF].)	Yes	Overhaul the control valve body and repair or replace any malfunctioning parts. (See ATX workshop manual (FN4A-EL).) If any problem remains, overhaul the transaxle and repair or replace any malfunctioning parts. (See ATX workshop manual (FN4A-EL).)
		No	Repair or replace any malfunctioning parts.
8	• Verify the test results. — If normal, return to the diagnostic index to service any additional symptoms. — If the malfunction remains, inspect the related Service information and perform repair or diagnosis. • If the vehicle is repaired, troubleshooting is completed. • If the vehicle is not repaired or additional diagnostic information is not available, replace the PCM.		

NO.18 EXCESSIVE SHIFT SHOCK IS FELT WHEN UPSHIFTING AND DOWNSHIFTING [FN4A-EL]

DPE050300000W22

18	Excessive shift shock is felt when upshifting and downshifting
DESCRIPTION	• Excessive shift shock is felt when depressing the accelerator pedal at upshifting. During cruising, excessive shift shock is felt when depressing the accelerator pedal at downshifting.

POSSIBLE CAUSE	• Shift shock may worsen when the fail-safe is operating. The shift shock has worsened if the TP sensor, input/turbine speed sensor, or vehicle speed sensor signal malfunctions. 1. Clutch slippage, burnt (Forward clutch, 2–4 brake band, 3–4 clutch) • Line pressure low, high • Shift solenoid D malfunction • Shift solenoid E malfunction • Shift solenoid A malfunction • Shift solenoid B malfunction • Shift solenoid C malfunction • Pressure control solenoid malfunction • Accelerator cable mis-adjustment • Control valve body malfunction • Body GND malfunction 2. Signal malfunction • Transaxle temperature sensor malfunction • Vehicle speed sensor malfunction • Sensor GND malfunction • TP sensor malfunction • Input/turbine speed sensor malfunction 3. Poor hydraulic operation (Malfunction in range change) • Pressure switch malfunction • Forward accumulator malfunction • Servo apply accumulator malfunction 4. Engine mounts installation • Loose attaching bolts • Worn parts **Note** • Before following the troubleshooting steps, make sure that the Automatic Transaxle On-Board Diagnostic and Automatic Transaxle Basic Inspection are conducted.

Diagnostic procedure

STEP	INSPECTION		ACTION
1	Inspect the engine mounts for loose tightening bolts or worn parts. Are all engine mounts normal?	Yes	Go to the next step.
		No	Readjust, retighten or replace engine mounts.
2	Perform the stall test. (See 05–17–4 Stall Test.) Is the stall speed normal?	Yes	Go to the next step.
		No	Repair or replace any malfunctioning parts.
3	Inspect the value at the following PCM PID using the WDS or equivalent. (See 01–40A–7 PCM INSPECTION [L8, LF].) • TP V Is the PID value normal?	Yes	Go to the next step.
		No	Repair or replace any malfunctioning parts.
4	Disconnect the PCM connector. Is the resistance between the ground terminal at the PCM connector and the body ground **less than 5.0 ohms**?	Yes	Go to the next step.
		No	Repair the open ground circuit. Reconnect the PCM.
5	Inspect the LPS PID value. Is the LPS PID value normal? (See 01–40A–7 PCM INSPECTION [L8, LF].)	Yes	Overhaul the control valve body and repair or replace any malfunctioning parts. (See ATX workshop manual (FN4A-EL).) If any problem remains, overhaul the transaxle and repair or replace any malfunctioning parts. (See ATX workshop manual (FN4A-EL).)
		No	Repair or replace any malfunctioning parts.
6	• Verify the test results. — If normal, return to the diagnostic index to service any additional symptoms. — If the malfunction remains, inspect the related Service information and perform repair or diagnosis. • If the vehicle is repaired, troubleshooting is completed. • If the vehicle is not repaired or additional diagnostic information is not available, replace the PCM.		

NO.19 EXCESSIVE SHIFT SHOCK ON TORQUE CONVERTER CLUTCH (TCC) [FN4A-EL]

DPE050300000W23

19	**Excessive shift shock on torque converter clutch (TCC)**
DESCRIPTION	• Strong shock is felt when the TCC is engaged.
POSSIBLE CAUSE	• The troubleshooting flow is the same as No.16 “JUDDER UPON TCC OPERATION”.

NO.20 NOISE OCCURS AT IDLE WHEN VEHICLE IS STOPPED IN ALL POSITIONS/RANGES [FN4A-EL]

DPE050300000W24

20	Noise occurs at idle when vehicle is stopped in all positions/ranges
DESCRIPTION	• Transaxle is noisy in all positions and ranges when the vehicle is idling.
POSSIBLE CAUSE	• The malfunction is in the oil pump which causes a high-pitched noise to be emitted from the transaxle at idle. **Note** • If a noise is emitted during shifting only, the malfunction is in shift solenoid D, E or shift solenoid A, B, C. If a noise is emitted during shifting at certain gears only or during deceleration only, it is gear noise. • Before following the troubleshooting steps, make sure that the Automatic Transaxle On-Board Diagnostic and Automatic Transaxle Basic Inspection are conducted.

Diagnostic procedure

STEP	INSPECTION		ACTION
1	Inspect engine condition. Is there any engine concern (i. e. rough idle)?	Yes	Go to appropriate symptom troubleshooting. (See Section F.)
		No	Go to the next step.
2	Does the noise stop when the solenoid connector is disconnected?	Yes	Go to the next step.
		No	Overhaul the control valve body and repair or replace any malfunctioning parts. (See ATX workshop manual (FN4A-EL).) If any problem remains, overhaul the transaxle and repair or replace any malfunctioning parts. (See ATX workshop manual (FN4A-EL).)
3	Inspect the value at the following PCM PIDs using the WDS or equivalent. (See 01–40A–7 PCM INSPECTION [L8, LF].) • TP • OSS • TSS Are the PID values normal?	Yes	Go to the next step.
		No	Repair or replace any malfunctioning parts.
4	Disconnect the PCM connector. Is the resistance between the ground terminal at the PCM connector and the body ground **less than 5.0 ohms**?	Yes	Go to the next step.
		No	Repair the open ground circuit. Reconnect the PCM.
5	Inspect the LPS PID value. Is the LPS PID value normal? (See 01–40A–7 PCM INSPECTION [L8, LF].)	Yes	Overhaul the control valve body and repair or replace any malfunctioning parts. (See ATX workshop manual (FN4A-EL).) If any problem remains, overhaul the transaxle and repair or replace any malfunctioning parts. (See ATX workshop manual (FN4A-EL).)
		No	Repair or replace any malfunctioning parts.
6	• Verify the test results. — If normal, return to the diagnostic index to service any additional symptoms. — If the malfunction remains, inspect the related Service information and perform repair or diagnosis. • If the vehicle is repaired, troubleshooting is completed. • If the vehicle is not repaired or additional diagnostic information is not available, replace the PCM.		

NO.21 NOISE OCCURS AT IDLE WHEN VEHICLE IS STOPPED IN D, M RANGES, OR IN R POSITION [FN4A-EL]

DPE050300000W25

21	Noise occurs at idle when vehicle is stopped in D, M ranges, or in R position
DESCRIPTION	• Transaxle is noisy in D, M ranges, or in R position when vehicle is idling.
POSSIBLE CAUSE	• Although the malfunction is basically the same as No.20 “NOISE OCCURS AT IDLE WHEN VEHICLE IS STOPPED IN ALL POSITIONS/RANGES”, other causes may include selector lever position disparity or TR switch position disparity.

NO.22 NO ENGINE BRAKING IN 1GR POSITION OF M RANGE [FN4A-EL]

DPE050300000W26

22	No engine braking in 1GR position of M range
DESCRIPTION	• Engine speed drops to idle but the vehicle coasts when the accelerator pedal is released when in 1GR of M range at low vehicle speed.

POSSIBLE CAUSE	1. Clutch slippage, burnt (low and reverse brake) • Line pressure low • Shift solenoid D malfunction • Shift solenoid E malfunction • Shift solenoid C malfunction • Control valve body malfunction • Body GND malfunction 2. Signal malfunction • TP sensor malfunction • Vehicle speed sensor malfunction • Sensor GND malfunction • Input/turbine speed sensor malfunction 3. PCM does not determine that the M range switch is ON (short, or open circuit, poor operation) • M range switch signal malfunction **Note** • Before following the troubleshooting steps, make sure that the Automatic Transaxle On-Board Diagnostic and Automatic Transaxle Basic Inspection are conducted.

Diagnostic procedure

STEP	INSPECTION		ACTION
1	Do the following symptoms occur concurrently? • Engine flares up or slips during acceleration. • Engine flares up or slips when shifting.	Yes	Go to symptom troubleshooting NO.14 “ENGINE FLARES UP OR SLIPS WHEN UPSHIFTING OR DOWNSHIFTING” or No.15 “ENGINE FLARES UP OR SLIPS WHEN ACCELERATING VEHICLE”.
		No	Repeat basic inspection and repair or replace any malfunctioning parts according to the inspection result. (See 05–03–4 BASIC INSPECTION [FN4A-EL].)
2	• Verify the test results. — If normal, return to the diagnostic index to service any additional symptoms. — If the malfunction remains, inspect the related Service information and perform repair or diagnosis. • If the vehicle is repaired, troubleshooting is completed. • If the vehicle is not repaired or additional diagnostic information is not available, replace the PCM.		

NO.23 TRANSAXLE OVERHEATS [FN4A-EL]

DPE050300000W27

23	Transaxle overheats
DESCRIPTION	• Burnt smell emitted from transaxle. • Smoke emitted from transaxle.
POSSIBLE CAUSE	• The malfunction is restricted to the hindrance of coolant at the oil cooler. In addition, overheating of the transaxle may be caused by a malfunction of the transaxle fluid temperature sensor. 1. Burnt (TCC) • Line pressure low • Control valve body malfunction • Accelerator cable mis-adjustment 2. Oil cooler malfunction (Foreign material mixed in ATF) 3. Transaxle fluid temperature sensor malfunction 4. Excessive amount of ATF 5. Torque converter malfunction **Note** • Before following the troubleshooting steps, make sure that the Automatic Transaxle On-Board Diagnostic and Automatic Transaxle Basic Inspection are conducted.

Diagnostic procedure

STEP	INSPECTION		ACTION
1	Inspect for bending, damage, corrosion or kinks of the oil cooler pipes. Are oil cooler pipes normal?	Yes	Go to the next step.
		No	Replace any malfunctioning parts.
2	Perform the stall test. (See 05–17–4 Stall Test.) Is the stall speed normal?	Yes	Go to the next step.
		No	Repair or replace any malfunctioning parts.
3	Inspect the value at the following PCM PID using the WDS or equivalent. (See 01–40A–7 PCM INSPECTION [L8, LF].) • TP Is the PID value normal?	Yes	Go to the next step.
		No	Repair or replace any malfunctioning parts.
4	Disconnect the PCM connector. Is the resistance between the ground terminal at the PCM connector and the body ground **less than 5.0 ohms**?	Yes	Go to the next step.
		No	Repair the open ground circuit. Reconnect the PCM.
5	Inspect the LPS PID value. Is the LPS PID value normal? (See 01–40A–7 PCM INSPECTION [L8, LF].)	Yes	Overhaul the control valve body and repair or replace any malfunctioning parts. (See ATX workshop manual (FN4A-EL).) If any problem remains, overhaul the transaxle and repair or replace any malfunctioning parts. (See ATX workshop manual (FN4A-EL).)
		No	Repair or replace any malfunctioning parts.
6	• Verify the test results. — If normal, return to the diagnostic index to service any additional symptoms. — If the malfunction remains, inspect the related Service information and perform repair or diagnosis. • If the vehicle is repaired, troubleshooting is completed. • If the vehicle is not repaired or additional diagnostic information is not available, replace the PCM.		

NO.24 ENGINE STALLS WHEN SHIFTED TO D, M RANGES, OR IN R POSITION [FN4A-EL]

DPE050300000W28

24	Engine stalls when shifted to D, M ranges, or in R position
DESCRIPTION	• Engine stalls when shifting from N or P position to D, M ranges or R position at idle.
POSSIBLE CAUSE	• The malfunction is on the engine control side (i.e. IAC system). Otherwise, the malfunction is in the input/turbine speed sensor (engine sometimes starts) or the TCC circuit (engine always stalls).

Diagnostic procedure

STEP	INSPECTION		ACTION
1	Go to symptom troubleshooting No.10 “LOW IDLE/STALLS DURING DECELERATION”. (See 01–03A–25 NO.10 LOW IDLE/STALLS DURING DECELERATION [L8, LF].) Is the engine control system normal?	Yes	Repeat the basic inspection and repair or replace any malfunctioning parts according to the inspection result. (See 05–03–4 BASIC INSPECTION [FN4A-EL].)
		No	Repair or replace any malfunctioning parts according to the inspection results.
2	• Verify the test results. — If normal, return to the diagnostic index to service any additional symptoms. — If the malfunction remains, inspect the related Service information and perform repair or diagnosis. • If the vehicle is repaired, troubleshooting is completed. • If the vehicle is not repaired or additional diagnostic information is not available, replace the PCM.		

NO.25 ENGINE STALLS WHEN DRIVING AT SLOW SPEEDS OR STOPPING [FN4A-EL]

DPE050300000W29

25	Engine stalls when driving at slow speeds or stopping
DESCRIPTION	• Engine stalls when the brake pedal is depressed while driving at low speed or stopping.
POSSIBLE CAUSE	• Malfunction is in engine control system (e.g. Fuel injection control, IAC system). Otherwise, the malfunction is in the control valve body, shift solenoid E or TCC.

Diagnostic procedure

STEP	INSPECTION		ACTION
1	Go to symptom troubleshooting No.10 “LOW IDLE/STALLS DURING DECELERATION”. (See 01–40A–7 PCM INSPECTION [L8, LF].) Is the engine control system normal?	Yes	Go to the next step.
		No	Repair or replace any malfunctioning parts according to the inspection results.
2	Go to symptom troubleshooting No.5 “ENGINE STALLS-AFTER START/AT IDLE” (See 01–40A–7 PCM INSPECTION [L8, LF].) Is the engine control system normal?	Yes	Repeat the basic inspection and repair or replace any malfunctioning parts according to the inspection result. (See 05–03–4 BASIC INSPECTION [FN4A-EL].)
		No	Repair or replace any malfunctioning parts according to the inspection results.
3	• Verify the test results. — If normal, return to the diagnostic index to service any additional symptoms. — If the malfunction remains, inspect the related Service information and perform repair or diagnosis. • If the vehicle is repaired, troubleshooting is completed. • If the vehicle is not repaired or additional diagnostic information is not available, replace the PCM.		

NO.26 STARTER DOES NOT WORK [FN4A-EL]

DPE050300000W30

26	Starter does not work
DESCRIPTION	• Starter does not work even when in P or N position.
POSSIBLE CAUSE	• Selector lever mis-adjustment • TR switch mis-adjustment • Open or short circuit in the TR switch terminal

NO.27 GEAR POSITION INDICATOR LIGHT DOES NOT ILLUMINATE IN M RANGE [FN4A-EL]

DPE050300000W31

27	Gear position indicator light does not illuminate in M range
DESCRIPTION	• Gear position indicator light in instrument cluster does not illuminate in M range with the ignition switch at ON.
POSSIBLE CAUSE	• M range switch, gear position indicator light or related wiring harness malfunction **Note** • Before following the troubleshooting steps, make sure that the Automatic Transaxle ON-Board Diagnostic and Automatic Transaxle Basic Inspection are conducted.

Diagnostic procedure

STEP	INSPECTION		ACTION
1	Do other indicator lights illuminate with the ignition switch at ON?	Yes	Go to the next step.
		No	Inspect the meter fuse.
2	Inspect the MNL SW PID value using the WDS or equivalent. Is the MNL SW PID value normal?	Yes	Inspect the instrument cluster.
		No	Inspect the M range switch. If the M range switch is normal, inspect for continuity between the M range switch and PCM terminal 1AQ.
3	• Verify the test results. — If normal, return to the diagnostic index to service any additional symptoms. — If the malfunction remains, inspect the related Service information and perform repair or diagnosis. • If the vehicle is repaired, troubleshooting is completed. • If the vehicle is not repaired or additional diagnostic information is not available, replace the PCM.		

NO.28 GEAR POSITION INDICATOR LIGHT ILLUMINATES IN D RANGE OR P, N, R POSITIONS [FN4A-EL]

DPE050300000W32

28	Gear position indicator light illuminates in D range or P, N, R positions
DESCRIPTION	• Gear position indicator light illuminates in D range or P, N, R positions with the ignition switch at ON.
POSSIBLE CAUSE	• M range switch related wiring harness malfunction **Note** • Before following the troubleshooting steps, make sure that the Automatic Transaxle On-board Diagnostic and Automatic Transaxle Basic Inspection are conducted.

Diagnostic procedure

STEP	INSPECTION		ACTION
1	Do other indicator lights illuminate with the ignition switch at ON?	Yes	Go to the next step.
		No	Inspect the meter fuse.
2	Inspect the MNL SW PID value using the WDS or equivalent. Is the MNL SW PID value normal?	Yes	Inspect the instrument cluster.
		No	Inspect the M range switch. If the M range switch is normal, inspect for continuity between the M range switch and PCM terminal 1AQ.
3	• Verify the test results. — If normal, return to the diagnostic index to service any additional symptoms. — If the malfunction remains, inspect the related Service information and perform repair or diagnosis. • If the vehicle is repaired, troubleshooting is completed. • If the vehicle is not repaired or additional diagnostic information is not available, replace the PCM.		

NO.29 DOES NOT UPSHIFT IN M RANGE [FN4A-EL]

DPE050300000W33

29	Does not upshift in M range
DESCRIPTION	• Gear position indicator light in instrument cluster illuminates, but the vehicle does not upshift when the selector lever is pushed to “+” side.
POSSIBLE CAUSE	• Up switch or related wiring harness malfunction **Note** • Before following the troubleshooting steps, make sure that the Automatic Transaxle On-board Diagnostic and Automatic Transaxle Basic Inspection are conducted.

Diagnostic procedure

STEP	INSPECTION		ACTION
1	Inspect the UP SW PID value using the WDS or equivalent. (See 01–40A–7 PCM INSPECTION [L8, LF].) Is the UP SW PID value normal?	Yes	Inspect the instrument cluster.
		No	Inspect the up switch. If the up switch is normal, inspect for continuity between the up switch and PCM terminal 1P.
2	• Verify the test results. — If normal, return to the diagnostic index to service any additional symptoms. — If the malfunction remains, inspect the related Service information and perform repair or diagnosis. • If the vehicle is repaired, troubleshooting is completed. • If the vehicle is not repaired or additional diagnostic information is not available, replace the PCM.		

NO.30 DOES NOT DOWNSHIFT IN M RANGE [FN4A-EL]

DPE050300000W34

30	Does not downshift in M range
DESCRIPTION	• Gear position indicator light in instrument cluster illuminates, but the vehicle does not downshift when the selector lever is pushed to “–” side.
POSSIBLE CAUSE	• Down switch or related wiring harness malfunction **Note** • Before following the troubleshooting steps, make sure that the Automatic Transaxle On-board Diagnostic and Automatic Transaxle Basic Inspection are conducted.

Diagnostic procedure

STEP	INSPECTION		ACTION
1	Inspect the DWN SW PID value using the WDS or equivalent. (See 01–40A–7 PCM INSPECTION [L8, LF].) Is the DWN SW PID value normal?	Yes	Inspect the instrument cluster.
		No	Inspect the down switch. If the down switch is normal, inspect for continuity between the down switch and PCM terminal 1AB.
2	• Verify the test results. — If normal, return to the diagnostic index to service any additional symptoms. — If the malfunction remains, inspect the related Service information and perform repair or diagnosis. • If the vehicle is repaired, troubleshooting is completed. • If the vehicle is not repaired or additional diagnostic information is not available, replace the PCM.		

05–17 AUTOMATIC TRANSAXLE

AUTOMATIC TRANSAXLE LOCATION INDEX [FN4A-EL] 05–17–2
MECHANICAL SYSTEM TEST [FN4A-EL] 05–17–3
ROAD TEST [FN4A-EL] 05–17–6
AUTOMATIC TRANSAXLE FLUID (ATF) INSPECTION [FN4A-EL]. 05–17–7
AUTOMATIC TRANSAXLE FLUID (ATF) REPLACEMENT [FN4A-EL] 05–17–9
TRANSAXLE RANGE (TR) SWITCH INSPECTION [FN4A-EL] 05–17–9
TRANSAXLE RANGE (TR) SWITCH REMOVAL/ INSTALLATION [FN4A-EL]. 05–17–11
TRANSAXLE RANGE (TR) SWITCH ADJUSTMENT [FN4A-EL] 05–17–14
TRANSAXLE FLUID TEMPERATURE (TFT) SENSOR INSPECTION [FN4A-EL] . . . 05–17–16
TRANSAXLE FLUID TEMPERATURE (TFT) SENSOR REMOVAL/INSTALLATION [FN4A-EL] 05–17–18
OIL PRESSURE SWITCH INSPECTION [FN4A-EL] 05–17–18
OIL PRESSURE SWITCH REMOVAL/ INSTALLATION [FN4A-EL]. 05–17–19
INPUT/TURBINE SPEED SENSOR INSPECTION [FN4A-EL] 05–17–20
INPUT/TURBINE SPEED SENSOR REMOVAL/ INSTALLATION [FN4A-EL] 05–17–20
VEHICLE SPEED SENSOR (VSS) INSPECTION [FN4A-EL]. 05–17–21
VEHICLE SPEED SENSOR (VSS) REMOVAL/ INSTALLATION [FN4A-EL] 05–17–22
SOLENOID VALVE INSPECTION [FN4A-EL]. 05–17–23
SOLENOID VALVE REMOVAL/INSTALLATION [FN4A-EL]. 05–17–25
PCM INSPECTION [FN4A-EL]. 05–17–26
PCM REMOVAL/INSTALLATION [FN4A-EL]. 05–17–26
AUTOMATIC TRANSAXLE REMOVAL/ INSTALLATION [FN4A-EL] 05–17–26
OIL SEAL REPLACEMENT [FN4A-EL]. . 05–17–32
CONTROL VALVE BODY REMOVAL [FN4A-EL]. 05–17–33
CONTROL VALVE BODY INSTALLATION [FN4A-EL]. 05–17–34
OIL COOLER FLUSHING [FN4A-EL] . . . 05–17–35
OIL COOLER REMOVAL/INSTALLATION [FN4A-EL]. 05–17–37
DRIVE PLATE REMOVAL/INSTALLATION [FN4A-EL]. 05–17–39

AUTOMATIC TRANSAXLE LOCATION INDEX [FN4A-EL]

DPE051700000W01

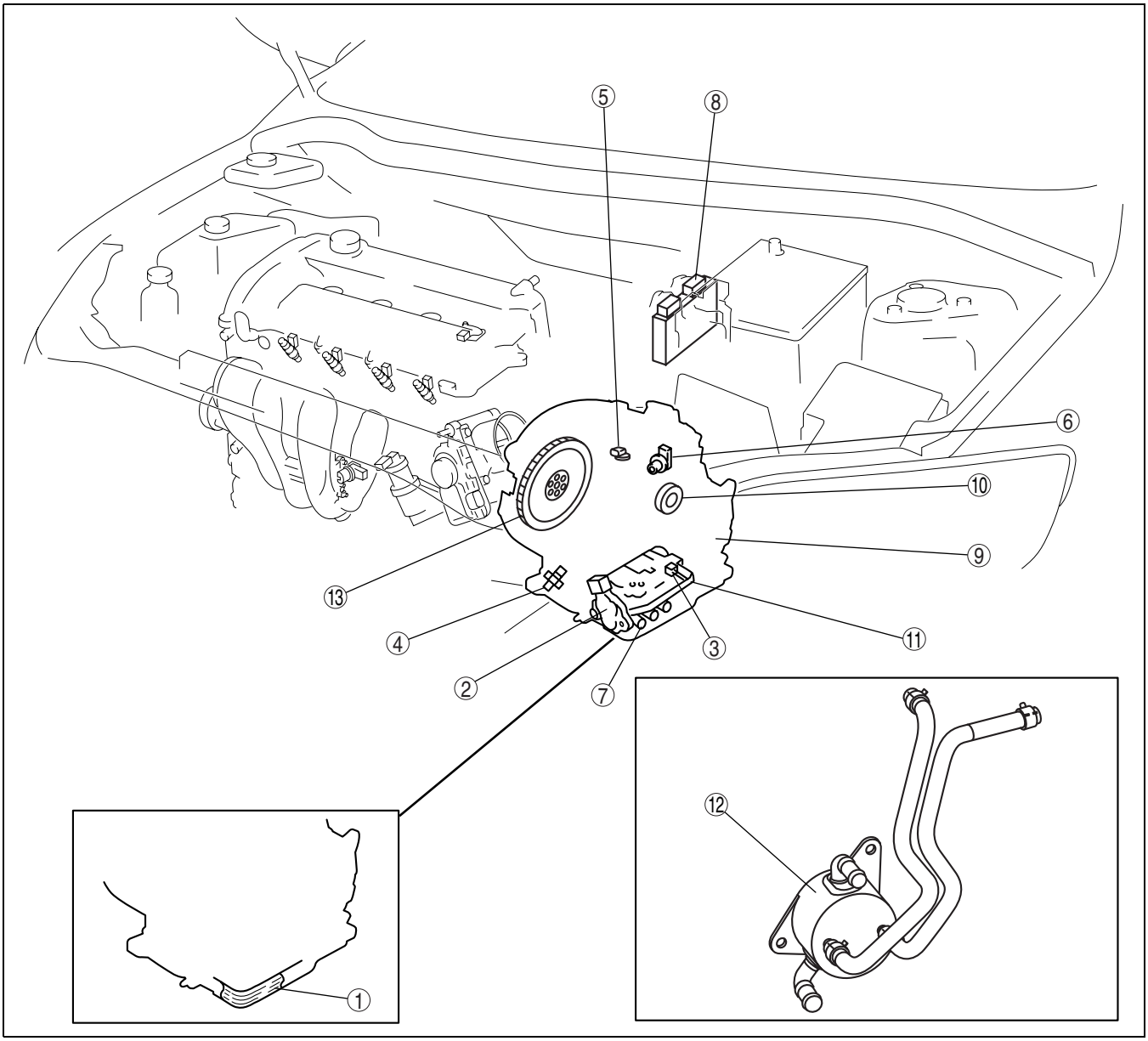

CPJ517ZWB001

1	Automatic transaxle fluid (ATF) (See 05–17–7 AUTOMATIC TRANSAXLE FLUID (ATF) INSPECTION [FN4A-EL].) (See 05–17–7 AUTOMATIC TRANSAXLE FLUID (ATF) INSPECTION [FN4A-EL].)
2	Transaxle range (TR) switch (See 05–17–9 TRANSAXLE RANGE (TR) SWITCH INSPECTION [FN4A-EL].) (See 05–17–11 TRANSAXLE RANGE (TR) SWITCH REMOVAL/INSTALLATION [FN4A-EL].) (See 05–17–14 TRANSAXLE RANGE (TR) SWITCH ADJUSTMENT [FN4A-EL].)
3	Transaxle fluid temperature (TFT) sensor (See 05–17–16 TRANSAXLE FLUID TEMPERATURE (TFT) SENSOR INSPECTION [FN4A-EL].) (See 05–17–18 TRANSAXLE FLUID TEMPERATURE (TFT) SENSOR REMOVAL/ INSTALLATION [FN4A-EL].)

4	Oil pressure switch (See 05–17–18 OIL PRESSURE SWITCH INSPECTION [FN4A-EL].) (See 05–17–19 OIL PRESSURE SWITCH REMOVAL/INSTALLATION [FN4A-EL].)
5	Input/turbine speed sensor (See 05–17–20 INPUT/TURBINE SPEED SENSOR INSPECTION [FN4A-EL].) (See 05–17–20 INPUT/TURBINE SPEED SENSOR REMOVAL/INSTALLATION [FN4A-EL].)
6	Vehicle speed sensor (See 05–17–21 VEHICLE SPEED SENSOR (VSS) INSPECTION [FN4A-EL].) (See 05–17–22 VEHICLE SPEED SENSOR (VSS) REMOVAL/INSTALLATION [FN4A-EL].)
7	Solenoid valve (See 05–17–23 SOLENOID VALVE INSPECTION [FN4A-EL].) (See 05–17–25 SOLENOID VALVE REMOVAL/ INSTALLATION [FN4A-EL].)

8	PCM (See 05–17–26 PCM INSPECTION [FN4A-EL].) (See 05–17–26 PCM REMOVAL/INSTALLATION [FN4A-EL].)
9	Automatic transaxle (See 05–17–26 AUTOMATIC TRANSAXLE REMOVAL/INSTALLATION [FN4A-EL].)
10	Oil seal (See 05–17–32 OIL SEAL REPLACEMENT [FN4A-EL].)
11	Control valve body (See 05–17–33 CONTROL VALVE BODY REMOVAL [FN4A-EL].) (See 05–17–34 CONTROL VALVE BODY INSTALLATION [FN4A-EL].)
12	Oil cooler (See 05–17–35 OIL COOLER FLUSHING [FN4A-EL].) (See 05–17–37 OIL COOLER REMOVAL/INSTALLATION [FN4A-EL].)
13	Drive plate (See 05–17–39 DRIVE PLATE REMOVAL/INSTALLATION [FN4A-EL].)

MECHANICAL SYSTEM TEST [FN4A-EL]

DPE051700000W02

Mechanical System Test Preparation

1. Engage the parking brake and use wheel chocks at the front and rear of the wheels.
2. Inspect the engine coolant level. (See 01–12A–2 COOLING SYSTEM SERVICE WARNINGS [L8, LF].) (See 01–12A–2 ENGINE COOLANT LEVEL INSPECTION [L8, LF].)
3. Inspect the engine oil level. (See 01–11A–2 ENGINE OIL LEVEL INSPECTION [L8, LF].)
4. Inspect the ATF level. (See 05–17–8 Automatic Transaxle Fluid (ATF) Level Inspection.)
5. Inspect the idle speed. (See 01–10A–31 Idle Speed Inspection.)
6. Inspect the ignition timing. (See 01–10A–31 Ignition Timing Inspection.)

Line Pressure Test

1. Perform mechanical system test preparation. (See 05–17–3 Mechanical System Test Preparation.)

Warning

- **Removing the square head plug when the ATF is hot can be dangerous. Hot ATF can come out of the opening and badly burn you. Before removing the square head plug, allow the ATF to cool.**

2. Connect the **SSTs** (49 0378 400C) to the line pressure inspection port and replace the gauge of the **SST** (49 0378 400C) with the **SST** (49 B019 901B).
3. Start the engine and warm it up until the ATF reaches **60—70 °C {140—158 °F}**.
4. Shift the selector lever to the D range.
5. Read the line pressure while the engine is idling for the D range.
6. Read the line pressure while the engine is idling for the R position and M (1GR, 2GR) range in the same manner as in Steps 4—5.
7. Stop the engine, then replace the **SST** (49 B019 901B) with the gauge of the **SST** (49 0378 400C).
8. Start the engine.
9. Firmly depress the brake pedal with the left foot.
10. Shift the selector lever to the D range.

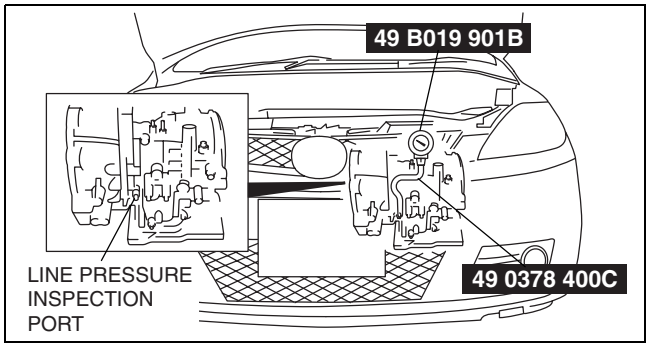

DPE517ZW1001

Caution

- **If the accelerator pedal is pressed for more than 5 s while the brake pedal is pressed, the transaxle could be damaged. Therefore, perform Steps 11 and 12 within 5 s.**

11. Gradually depress the accelerator pedal with the right foot.

12. When the engine speed no longer increases, quickly read the line pressure and release the accelerator pedal.
13. Shift the selector lever to the N position and idle the engine for **1 min or more** to cool the ATF.
14. Read the line pressure at the engine stall speed for the M (1GR, 2GR) range and R position in the same manner as in Steps 9—13.

Line pressure

Position/range		Specification (kPa {kgf/cm^2, psi})
D, M (1GR, 2GR)	Idle	330—470 {3.4—4.7, 48—68}
	Stall	1,160—1,320 {11.8—13.5, 168—191}
R	Idle	490—710 {5.0—7.2, 72—102}
	Stall	1,750—1,970 {17.8—20.1, 245—285}

Warning
- **Removing the SST when the ATF is hot can be dangerous. Hot ATF can come out of the opening and badly burn you. Before removing the SST, allow the ATF to cool.**

15. Remove the **SSTs**.
16. Install a new square head plug in the inspection port.

Tightening torque
4.8—9.8 N·m {49—99 kgf·cm, 43—85 in·lbf}

Evaluation of line pressure test

Condition	Possible cause
Low pressure in all positions/ranges	• Worn oil pump • Oil leaking from oil pump, control valve body, and/or transaxle case • Pressure regulator valve stuck • Pressure control solenoid malfunction • Solenoid reducing valve stuck
Low pressure in D, M (1GR, 2GR) only	• Oil leaking from forward clutch hydraulic circuit
Low pressure in M (2GR) only	• Oil leaking from 2-4 brake band hydraulic circuit
Low pressure in M (1GR), R only	• Oil leaking from low and reverse brake hydraulic circuit
Low pressure in R only	• Oil leaking from reverse clutch hydraulic circuit
Higher pressure in all positions/ranges	• Pressure control solenoid malfunction and/or open harness • Pressure regulator valve stuck • TCM malfunction

Stall Test
1. Perform mechanical system test preparation. (See 05–17–3 Mechanical System Test Preparation.)
2. Start the engine.
3. Firmly depress the brake pedal with the left foot.
4. Shift the selector lever to the D range.

Caution
- **If the accelerator pedal is depressed for more than 5 s while the brake pedal is depressed, the transaxle could be damaged. Therefore, perform Steps 5 and 6 within 5 s.**

5. Gently depress the accelerator pedal with the right foot.
6. When the engine speed no longer increases, quickly read the engine speed and release the accelerator pedal.
7. Shift the selector lever to the N position and idle the engine for **1 min or more** to cool the ATF.
8. Perform a stall test of the M range and R position in the same manner as in Steps 3—7.
9. Turn off the engine.

Engine stall speed

Position/range	Specification (rpm)
D, M (1GR, 2GR)	2,200—2,800
R	

Evaluation of stall test

Condition	Possible cause	
Above specification	Insufficient line pressure, torque converter pressure	• Worn oil pump
		• Oil leaking from oil pump, control valve, and/or transaxle case
		• Pressure regulator valve sticking
		• Converter relief valve sticking
		• Pressure control solenoid malfunction
	In D, M (1GR, 2GR) ranges	• Forward clutch slipping
	In M (2GR) range	• 2-4 brake band slipping
	In M (1GR) range and R position	• Low and reverse brake slipping
	In R position	• Low and reverse brake slipping • Reverse clutch slipping • Perform road test to determine whether problem is in low and reverse brake or reverse clutch • Engine braking felt in M (1GR) range: Reverse clutch is defective. • Engine braking not felt in M (1GR) range: Low and reverse brake is defective.
Below specification		• Engine lack of power

Time Lag Test

1. Perform mechanical system test preparation. (See 05–17–3 Mechanical System Test Preparation.)
2. Start the engine.
3. Warm up the engine until the ATF temperature reaches **60—70°C {140—158°F}**.
4. Shift the selector lever from the N position to D range.
5. Use a stopwatch to measure the time it takes from shifting until shock is felt. Take three measurements for each test and average from the results using the following formula.

   Formula
   Average time lag = (Time 1 + Time 2 + Time 3) / 3

6. Perform the test for the following shifts in the same manner as in Step 5.
   - N position → R position

   Time lag
   N position→D range: 0.4—0.7 s
   N position→R position: 0.4—0.7 s

Evaluation of time lag test

Condition		Possible cause
N→D shift	More than specification	• Low line pressure • Forward clutch slipping • Oil leaking from forward clutch fluid circuit • Shift solenoid A not operating properly
	Less than specification	• Forward accumulator not operating properly • Shift solenoid A not operating properly • Excessive line pressure
N→R shift	More than specification	• Low line pressure • Low and reverse brake slipping • Reverse clutch slipping • Shift solenoid B not operating properly
	Less than specification	• Servo apply accumulator not operating properly • Shift solenoid B not operating properly • Excessive line pressure

ROAD TEST [FN4A-EL]

DPE051700000W03

Warning

- **When performing a road test, be aware of other vehicles, people, impediments to avoid an accident.**

Note

- When the legal speed limit must be exceeded, use a chassis dynamometer instead of performing a road test.

Road Test Preparation

1. Inspect the engine coolant level. (See 01–12A–2 COOLING SYSTEM SERVICE WARNINGS [L8, LF].) (See 01–12A–2 ENGINE COOLANT LEVEL INSPECTION [L8, LF].)
2. Inspect the engine oil level. (See 01–11A–2 ENGINE OIL LEVEL INSPECTION [L8, LF].)
3. Inspect the ATF level. (See 05–17–8 Automatic Transaxle Fluid (ATF) Level Inspection.)
4. Inspect the idle speed. (See 01–10A–31 Idle Speed Inspection.)
5. Inspect the ignition timing. (See 01–10A–31 Ignition Timing Inspection.)
6. Bring up the engine and transaxle to normal operating temperature.

Shift Diagram
D range (normal mode)

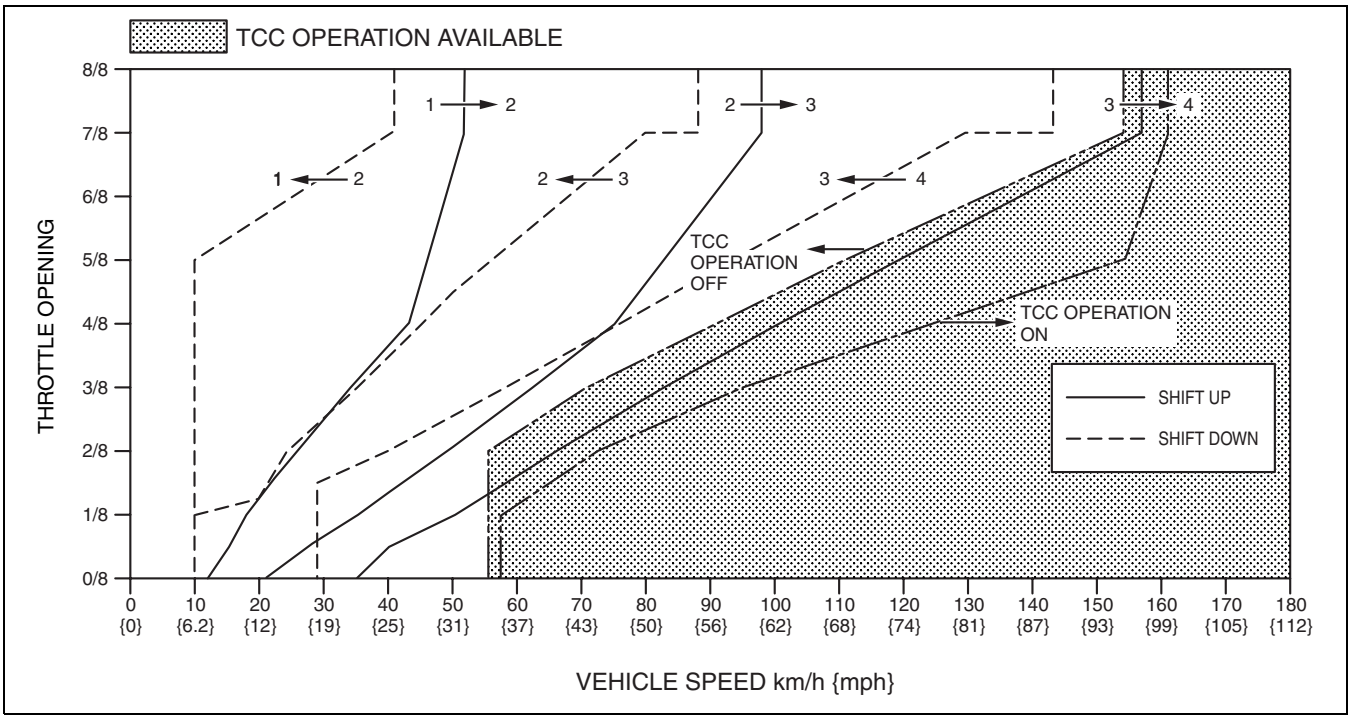

DPE517ZW1002

D Range Test

1. Perform road test preparation. (See 05–17–6 Road Test Preparation.)
2. Shift the selector lever to D range.
3. Accelerate the vehicle at half and wide open.
4. Verify that 1→2, 2→3, and 3→4 upshifts and downshifts are obtained. The shift points must be as shown in the table below.
   - If there is any malfunction, inspect the PCM and ATX. (See 05–03–4 SYMPTOM TROUBLESHOOTING ITEM TABLE [FN4A-EL].)
5. Drive the vehicle in 4GR, 3GR, and 2GR and verify that kickdown occurs for 4→3, 3→2, 2→1 downshifts, and that the shift points are as shown in the table below.
   - If there is any malfunction, inspect the PCM and ATX. (See 05–03–4 SYMPTOM TROUBLESHOOTING ITEM TABLE [FN4A-EL].)
6. Decelerate the vehicle and verify that engine braking effect is felt in 2GR, 3GR and 4GR.
   - If there is any malfunction, inspect the PCM and ATX. (See 05–03–4 SYMPTOM TROUBLESHOOTING ITEM TABLE [FN4A-EL].)
7. Drive the vehicle and verify that TCC operation is obtained. The operation points must be as shown in the table below.

- If there is any malfunction, inspect the PCM and ATX. (See 05–03–4 SYMPTOM TROUBLESHOOTING ITEM TABLE [FN4A-EL].)

Vehicle speed at shift point table

Range	Mode	Throttle condition	Shift	Vehicle speed (km/h {mph})	Turbine speed (rpm)
D	NORMAL	Wide open	$D_1 \rightarrow D_2$	50—56 {31—34}	5,450—6,050
			$D_2 \rightarrow D_3$	96—104 {60—64}	5750—6,200
			$D_3 \rightarrow D_4$	154—164 {96—101}	5,950—6,300
		Half open	$D_1 \rightarrow D_2$	36—44 {23—27}	3,850—4,800
			$D_2 \rightarrow D_3$	64—81 {40—50}	3,850—4,800
			$D_3 \rightarrow D_4$	87—114 {54—70}	3,350—4,350
			TCC ON (D_4)	107—140 {67—86}	2,900—3,700
		Closed	$D_4 \rightarrow D_3$	26—32 {17—19}	700—850
			$D_3 \rightarrow D_1$	7—13 {5—8}	300—450
		Kickdown	$D_4 \rightarrow D_3$	138—148 {86—91}	3,700—3,950
			$D_3 \rightarrow D_2$	84—92 {53—57}	3,250—3,500
			$D_2 \rightarrow D_1$	38—44 {24—27}	2,300—2,600
	POWER	Wide open	$D_1 \rightarrow D_2$	50—56 {31—34}	5,450—6,050
			$D_2 \rightarrow D_3$	96—104 {60—64}	5,750—6,200
			$D_3 \rightarrow D_4$	154—164 {96—101}	5,950—6,300
		Half open	$D_1 \rightarrow D_2$	36—44 {23—27}	3,850—4,800
			$D_2 \rightarrow D_3$	70—87 {44—53}	4,150—5,200
			$D_3 \rightarrow D_4$	108—132 {67—81}	4,150—5,050
		Closed	$D_4 \rightarrow D_3$	36—42 {23—26}	1,000—1,100
			$D_3 \rightarrow D_1$	9—15 {6—9}	350—550
		Kickdown	$D_4 \rightarrow D_3$	138—148 {86—91}	3,700—3,950
			$D_3 \rightarrow D_2$	84—92 {53—57}	3,250—3,500
			$D_2 \rightarrow D_1$	38—44 {24—27}	2,300—2,600

M Range Test

1. Perform road test preparation. (See 05–17–6 Road Test Preparation.)
2. Shift the selector lever to M range.
3. Verify that 1→2, 2→3, and 3→4 upshifts and 4→3, 3→2, and 2→1 downshifts are obtained by manual shifting of the selector lever forward and back.
   - If there is any malfunction, inspect the PCM and ATX. (See 05–03–4 SYMPTOM TROUBLESHOOTING ITEM TABLE [FN4A-EL].)
4. Decelerate the vehicle and verify that 4→3, 3→1 downshifts are obtained. The shift points must be as shown in the table below.
   - If there is any malfunction, inspect the PCM and ATX. (See 05–03–4 SYMPTOM TROUBLESHOOTING ITEM TABLE [FN4A-EL].)
5. Decelerate the vehicle and verify that engine braking effect is felt in all gears.
   - If there is any malfunction, inspect the PCM and ATX. (See 05–03–4 SYMPTOM TROUBLESHOOTING ITEM TABLE [FN4A-EL].)

Vehicle speed at shift point table

Range	Mode	Throttle condition	Shift	Vehicle speed km/h {mph}	Turbine speed (rpm)
M	Manual	All round	$M_4 \rightarrow M_3$	26—32 {17—19}	700—850
			$M_3 \rightarrow M_1$	7—13 {5—8}	300—450

P Position Test

1. Shift into P position on a gentle slope. Release the brake and verify that the vehicle does not roll.
   - If there is any malfunction, inspect the ATX. (See 05–03–4 SYMPTOM TROUBLESHOOTING ITEM TABLE [FN4A-EL].)

AUTOMATIC TRANSAXLE FLUID (ATF) INSPECTION [FN4A-EL]

DPE051700000W04

Automatic Transaxle Fluid (ATF) Condition Inspection

1. Inspect the ATF for the following to determine whether the transaxle should be disassembled.

- The ATF is muddy.
- The ATF smells strange or unusual.

ATF Condition

Condition			Possible cause
Clear dark red		Normal	—
Light red (pink)		Contaminated with water	• Damaged oil cooler • Poor filler tube installation: Problem could occur to parts inside the transaxle by water contamination. It is necessary to overhaul the transaxle and detect defected parts. If necessary, replace the transaxle.
Reddish brown	Has burnt smell and metal particles are found	Deteriorated ATF	Defective powertrain components inside the transaxle: Particles cause wide range of problems by plugging up in oil pipe, control valve body and oil cooler. • When large amount of metal particles are found, overhaul the transaxle and inspect for defective parts. If necessary, replace the transaxle. • Implement flushing operation as there is a possibility to have particles plugging up the oil pipe or oil cooler.
	Has no burnt smell	Normal	• Discoloration by oxidation

Automatic Transaxle Fluid (ATF) Level Inspection

Caution

- **The ATF amount varies according to ATF temperature. Therefore, when checking the ATF level or replacing the ATF, use a thermometer to measure the temperature then adjust the ATF amount to the specified level according to the specified temperature.**

1. Place the vehicle on level ground.
2. Apply the parking brake and position wheel chocks securely to prevent the vehicle from rolling.
3. Adjust the length or thermometer probe so that the length is the same as the depth gauge, and hold the probe with a paper holder. Insert into the filler tube and measure the temperature.
   - If necessary, inspect the ATF before warming up the engine. In this case, use the cool range **(15—25 °C {59—77 °F})**.
4. Warm up the engine until the ATF reaches **60—70 °C {140—158 °F}**.
5. Shift the selector lever and pause momentarily in each range (P—D) while depressing the brake pedal.
6. Shift the selector lever to P position.

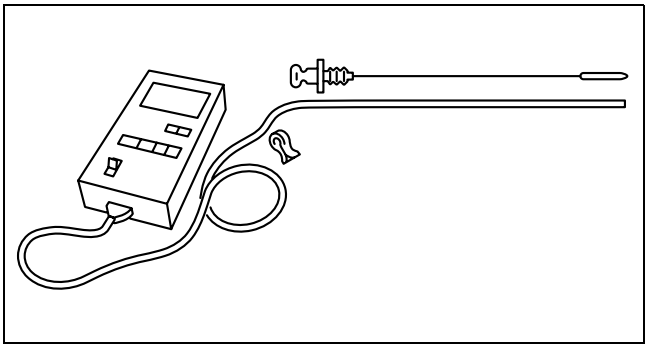

B3E0517W083

7. Verify that the ATF level is in the HOT range **(65 °C {149 °F})** while the engine is idling.
   - If necessary, add ATF to the specification.

   ATF
   Type: ATF M-V or equivalent

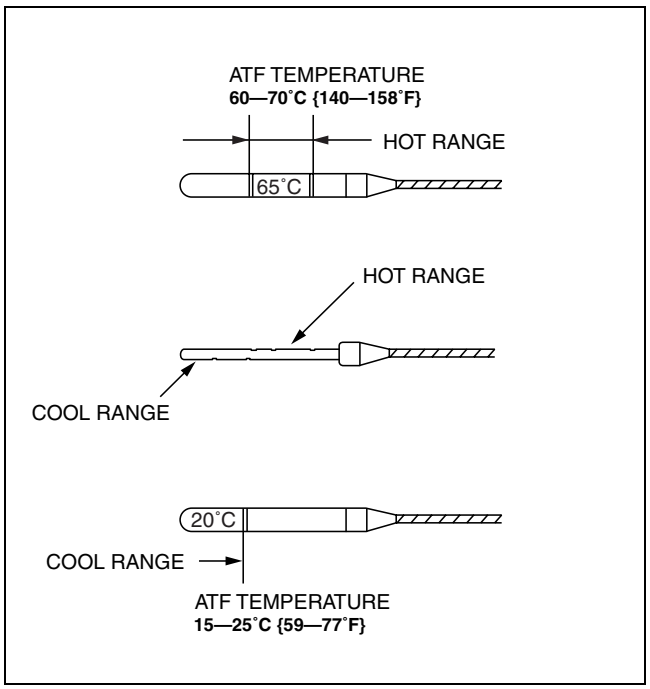

B3E0517W005

AUTOMATIC TRANSAXLE FLUID (ATF) REPLACEMENT [FN4A-EL]

DPE051700000W05

Warning
- **A hot transaxle and ATF can cause severe burns. Turn off the engine and wait until they are cool before replacing the ATF.**

1. Remove the oil dipstick.
2. Remove the oil drain plug and washer.
3. Drain the ATF into a container.
4. Install a new washer and the drain plug.

   Tightening torque
   29.4—41.2 N·m {3.0—4.2 kgf·m, 21.7—30.3 ft·lbf}

5. Add the specified ATF until ATF level reaches lower notch of dipstick type of ATF through the oil filler tube.

   ATF
   Type: ATF M-V or equivalent
   Capacity (Approx. quantity): 7.2 L {7.6 US qt, 6.3 Imp qt}

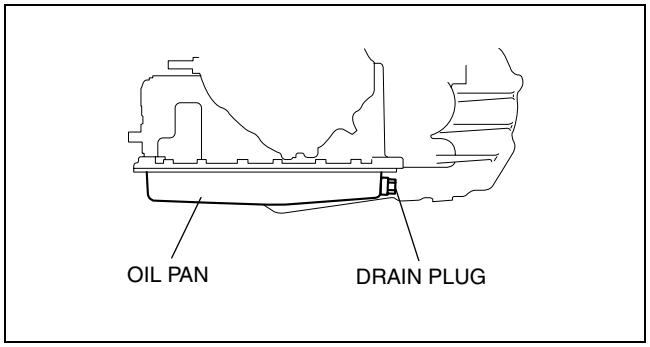

B3E0517W081

6. Ensure that the ATF level is in the HOT range **(65 °C {149 °F}).**
   - Add ATF to the specified level as necessary.

TRANSAXLE RANGE (TR) SWITCH INSPECTION [FN4A-EL]

DPE051719200W01

Operating Inspection

1. Verify that the starter operates only when the ignition switch is turned to the START position with the selector lever in P or N position.
   - If there is any malfunction, adjust the TR switch.
2. Verify that the back-up lights illuminate when shifted to R position with the ignition switch at the ON position.
   - If there is any malfunction, adjust the TR switch.

3. Verify that the positions of the selector lever and the indicator are aligned.
   - If there is any malfunction, adjust the TR switch.

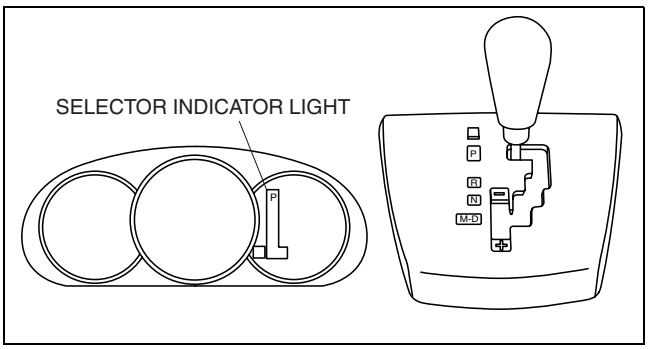

DPE517ZW1003

Continuity Inspection

Caution
- **Water or foreign material entering the connector can cause a poor connection or corrosion. Be sure not to drop water or foreign material on the connector when disconnecting it.**

1. Remove the battery duct and battery cover. (See 01–17A–1 BATTERY REMOVAL/INSTALLATION [L8, LF].)
2. Disconnect the negative battery cable.
3. Remove the under cover.
4. Disconnect the TR switch connector.

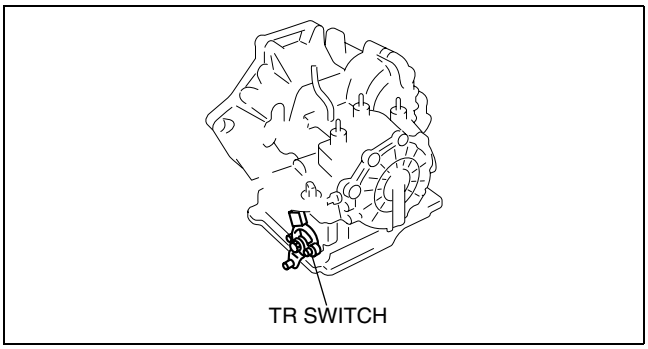

A6E5614W008

5. Verify that the continuity is as indicated in the table.

○—○ : Continuity

Position/Range	Connector terminal			
	A	F	D	E
P	○—○			
R			○—○	
N	○—○			
D				

B3E0517W006

   - If there is any malfunction, adjust the TR switch and go to Step 5.
6. Reinspect for continuity at TR switch.
   - If there is any malfunction, replace the TR switch. (See 05–17–11 TRANSAXLE RANGE (TR) SWITCH REMOVAL/INSTALLATION [FN4A-EL].)
7. Connect the TR switch connector.
8. Install the under cover.
9. Connect the negative battery cable.
10. Install the battery duct and battery cover. (See 01–17A–1 BATTERY REMOVAL/INSTALLATION [L8, LF].)

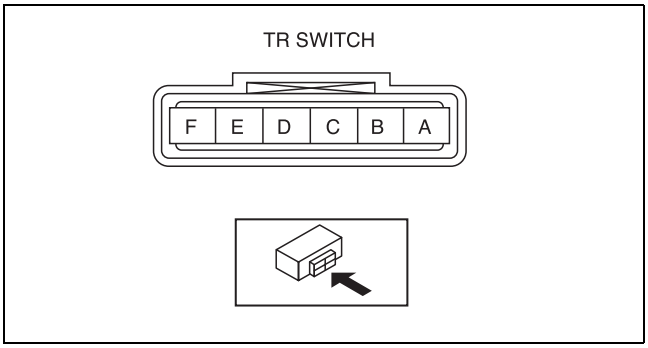

A6E5614W010

Resistance Inspection (On-Vehicle Inspection)

Caution
- **Water or foreign material entering the connector can cause a poor connection or corrosion. Be sure not to drop water or foreign material on the connector when disconnecting it.**

1. Remove the battery duct and battery cover. (See 01–17A–1 BATTERY REMOVAL/INSTALLATION [L8, LF].)
2. Disconnect the negative battery cable.
3. Remove the under cover.
4. Disconnect the TR switch connector.

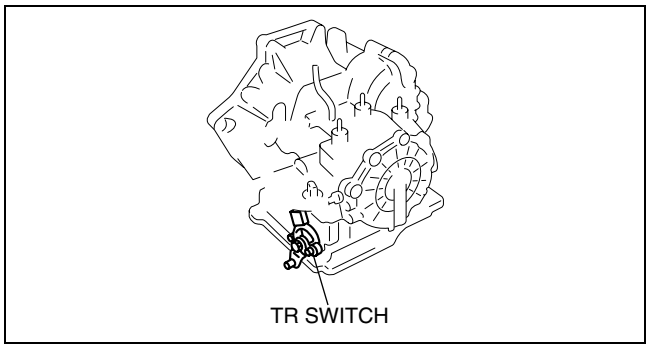

A6E5614W008

5. Measure the resistance between the following terminals.
   - If there is any malfunction, inspect the ground, then perform the operating inspection.

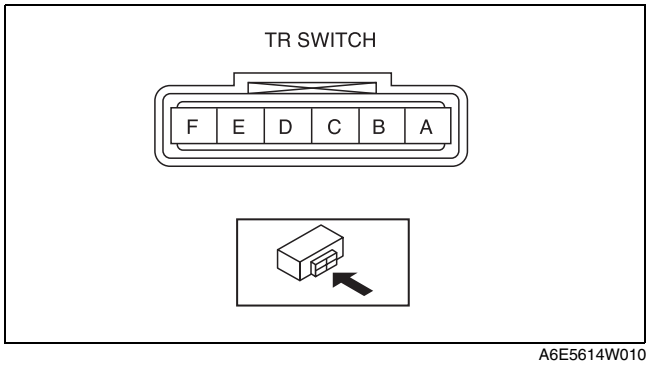

A6E5614W010

Transaxle range (TR) switch

Terminal	Position/Range	Resistance (ohm)
B—C	P	4,085—4,515
	R	1,425—1,575
	N	713—788
	D	371—409

6. Connect the TR switch connector.
7. Install the under cover.
8. Connect the negative battery cable.
9. Install the battery duct and battery cover. (See 01–17A–1 BATTERY REMOVAL/INSTALLATION [L8, LF].)

TRANSAXLE RANGE (TR) SWITCH REMOVAL/INSTALLATION [FN4A-EL]

DPE051719200W02

1. Remove the battery duct and battery cover. (See 01–17A–1 BATTERY REMOVAL/INSTALLATION [L8, LF].)
2. Disconnect the negative battery cable.
3. Remove the under cover.

Caution
- **Water or foreign material entering the connector can cause a poor connection or corrosion. Be sure not to drop water or foreign material on the connector when disconnecting it.**

4. Disconnect the TR switch connector.

5. Remove the clip and disconnect the selector cable.

Caution
- **Do not use an impact wrench. Hold the manual shaft lever when removing the manual shaft nut, or the transaxle may be damaged.**

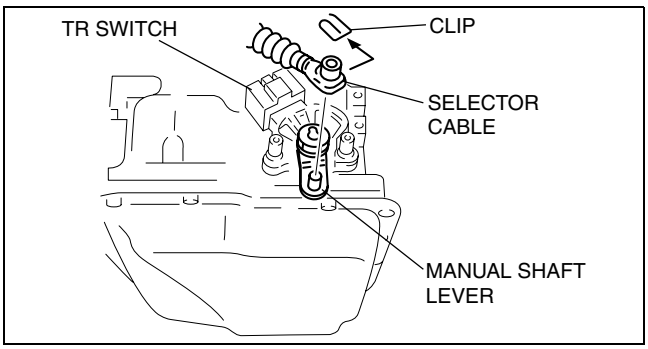

A6E5614W011

6. Set the adjustable wrench as shown in the figure to hold the manual shaft lever.
7. Remove the manual shaft nut and washer.

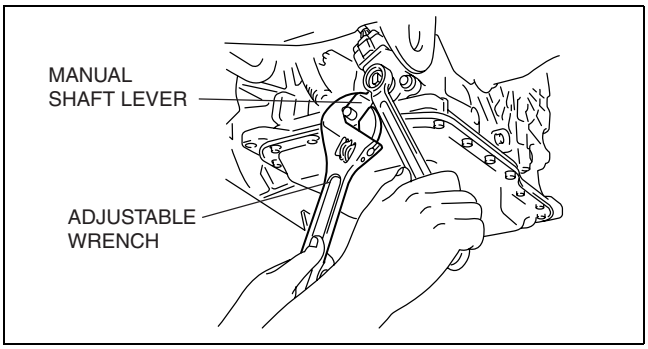

B3E0517W060

8. Remove the manual shaft lever.
9. Remove the TR switch.

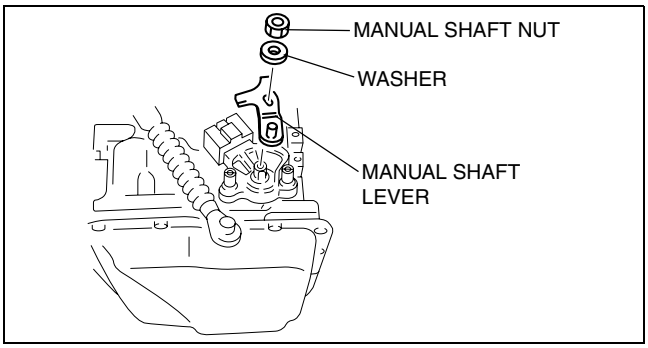

A6E5614W012

10. Rotate the manual shaft to the converter housing side fully, then return two notches to set the N position.

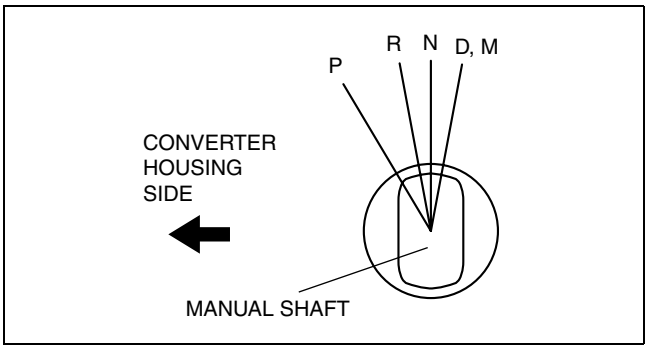

C3U0517W095

11. Turn the protrusion between the TR switch terminals B and C until the resistance becomes **750 ohms**.

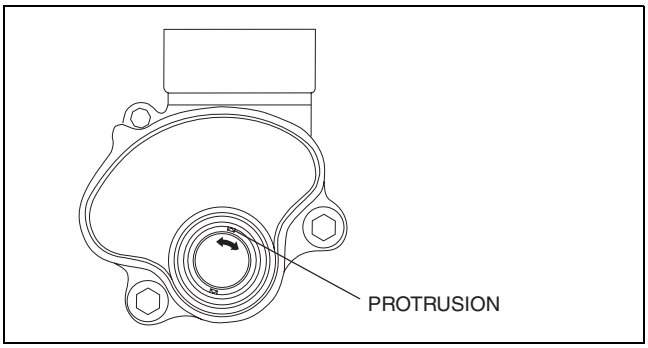

A6E5614W014

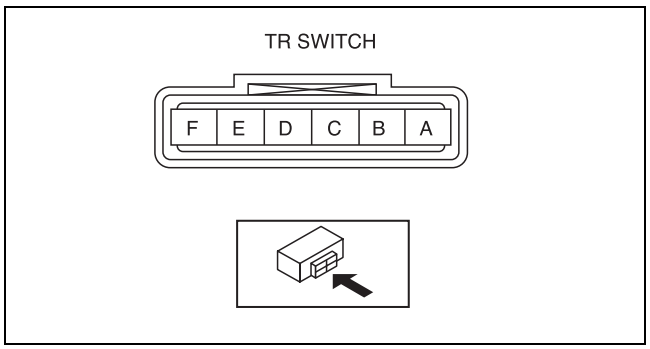

A6E5614W010

12. Install the TR switch while aligning the protrusion and groove as shown in the figure.
13. Hand-tighten the TR switch mounting bolts.

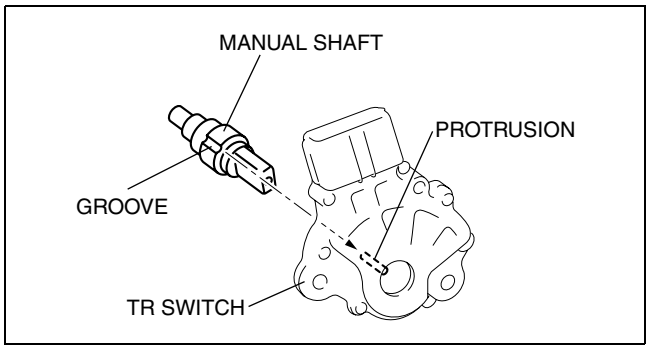

A6E5614W016

14. Inspect the resistance between the TR switch terminals B and C.
    - If there is any malfunction, readjust the TR switch. (See 05–17–14 TRANSAXLE RANGE (TR) SWITCH ADJUSTMENT [FN4A-EL].)

    Resistance
    750 ohms

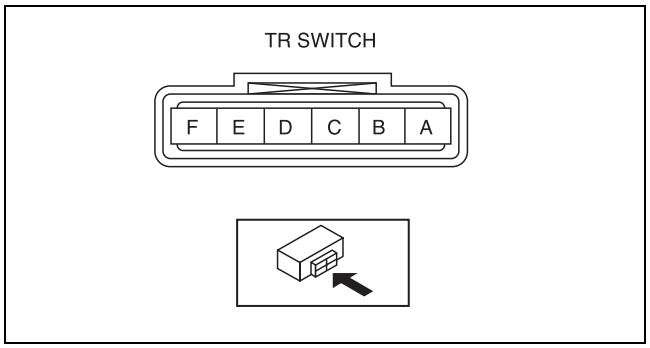

A6E5614W010

15. Tighten the TR switch mounting bolts.

    Tightening torque
    8—11 N·m {82—112 kgf·cm, 71—97 in·lbf}

    Caution
    - **Do not use an impact wrench. Hold the manual shaft lever when removing the manual shaft nut, or the transaxle may be damaged.**

16. Install the manual shaft lever and the washer.

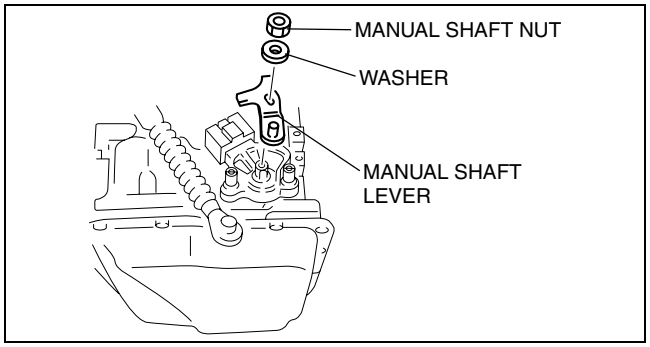

A6E5614W012

17. Set the adjustable wrench as shown in the figure to hold the manual shaft lever, and tighten the manual shaft nut.

    Tightening torque
    31.4—46.1 N·m {3.2—4.7 kgf·m, 23.2—33.9 ft·lbf}

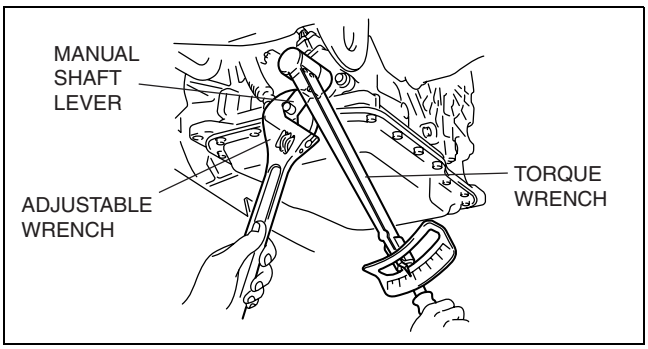

B3E0517W061

18. Install the clip to the selector cable as shown in the figure.
19. Shift the selector lever to P position.
20. Turn the manual shaft lever to P position.

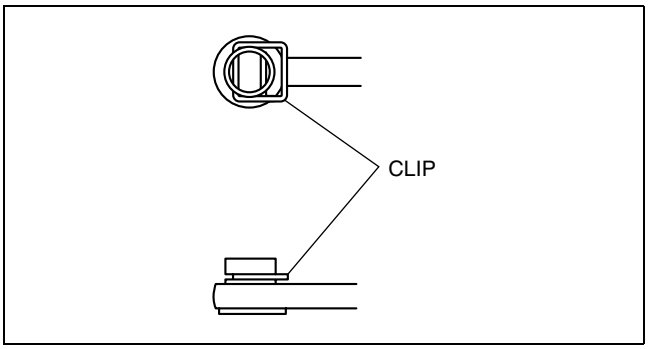

B3E0517W091

21. Connect the selector cable.
22. Inspect for continuity at the TR switch. (See 05–17–9 TRANSAXLE RANGE (TR) SWITCH INSPECTION [FN4A-EL].)
    - If there is any malfunction, readjust the TR switch. (See 05–17–14 TRANSAXLE RANGE (TR) SWITCH ADJUSTMENT [FN4A-EL].)
23. Connect the TR switch connector.
24. Install the under cover.
25. Connect the negative battery cable.
26. Install the battery duct and battery cover. (See 01–17A–1 BATTERY REMOVAL/INSTALLATION [L8, LF].)

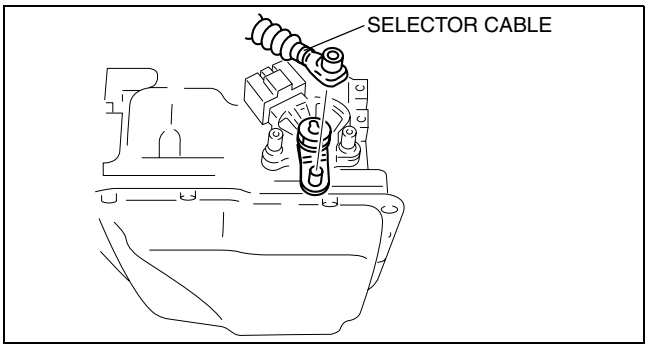

A6E5614W019

27. Inspect operation of the TR switch. (See 05–17–9 TRANSAXLE RANGE (TR) SWITCH INSPECTION [FN4A-EL].)
    - If there is any malfunction, readjust the TR switch. (See 05–17–14 TRANSAXLE RANGE (TR) SWITCH ADJUSTMENT [FN4A-EL].)

TRANSAXLE RANGE (TR) SWITCH ADJUSTMENT [FN4A-EL]

DPE051719200W03

1. Remove the battery duct and battery cover. (See 01–17A–1 BATTERY REMOVAL/INSTALLATION [L8, LF].)
2. Disconnect the negative battery cable.
3. Remove the under cover.

Caution
- **Water or foreign material entering the connector can cause a poor connection or corrosion. Be sure not to drop water or foreign material on the connector when disconnecting it.**

4. Remove the clip and disconnect the selector cable.

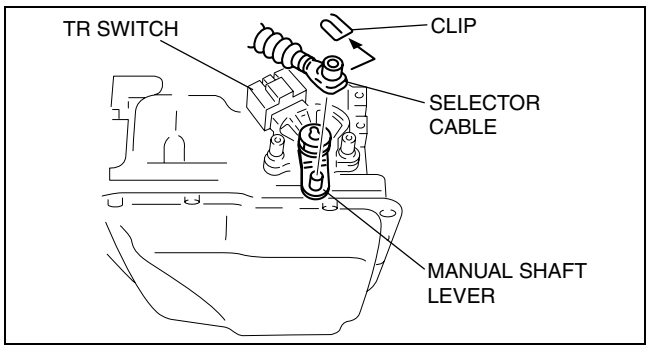

A6E5614W011

5. Rotate the manual shaft to the converter housing side fully, then return two notches to set the N position.

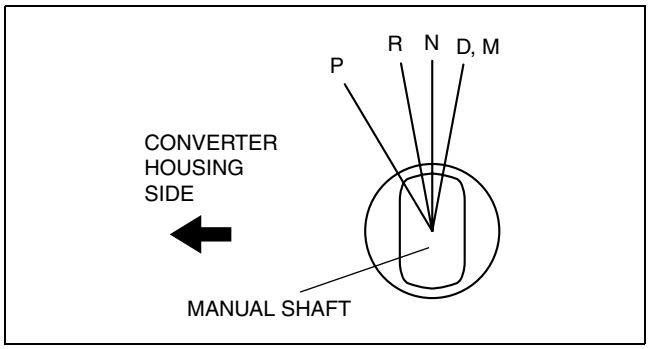

C3U0517W095

6. Disconnect the TR switch connector.

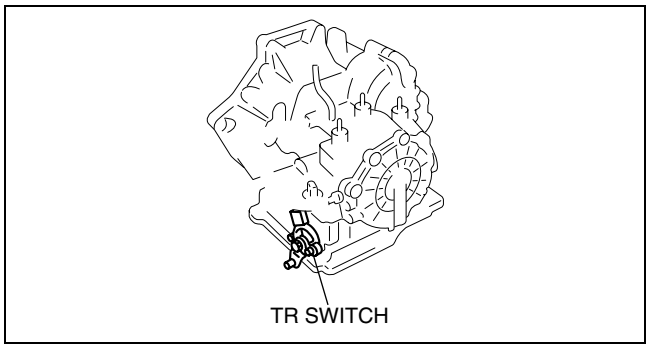

A6E5614W008

7. Loosen the TR switch mounting bolts.

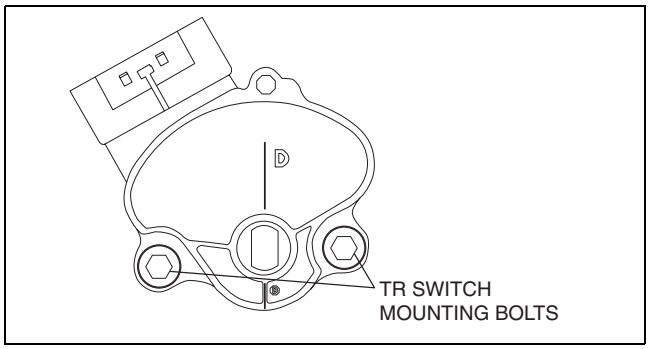

A6E5614W020

8. Measure the resistance between the TR switch terminals B and C.
9. Adjust the switch to the point as follows.

   Resistance
   750 ohms

10. Tighten the TR switch mounting bolts.

    Tightening torque
    8—11 N·m {82—112 kgf·cm, 71—97 in·lbf}

11. Move the selector lever to N position.

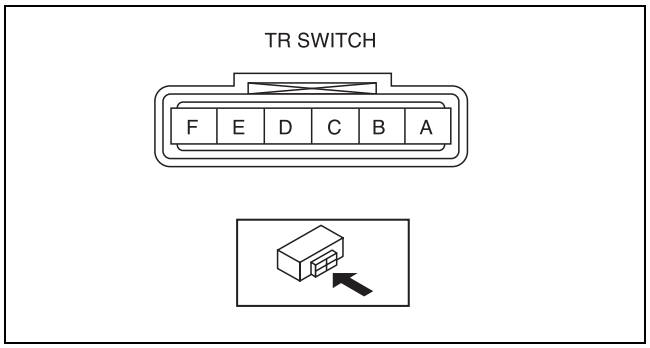

A6E5614W010

12. Verify that the TR switch is aligned with N position.
13. Connect the TR switch connector.
14. Install the clip to the selector cable as shown in the figure.

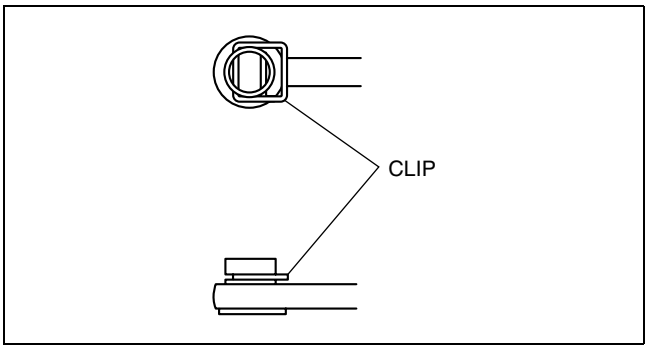

B3E0517W091

15. Connect the selector cable to the manual shaft lever as shown in the figure.
16. Inspect the TR switch operation. (See 05–17–9 TRANSAXLE RANGE (TR) SWITCH INSPECTION [FN4A-EL].)
    - If there is any malfunction, readjust the TR switch.
17. Install the under cover.
18. Connect the negative battery cable.
19. Instathe battery duct and battery cover. (See 01–17A–1 BATTERY REMOVAL/INSTALLATION [L8, LF].)

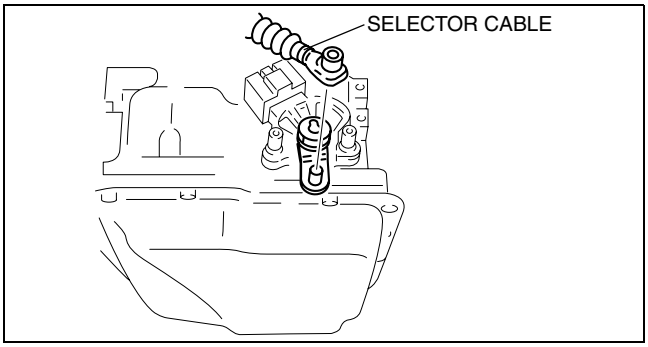

A6E5614W019

TRANSAXLE FLUID TEMPERATURE (TFT) SENSOR INSPECTION [FN4A-EL]

DPE051719200W04

On-Vehicle Inspection

1. Remove the battery duct and battery cover. (See 01–17A–1 BATTERY REMOVAL/INSTALLATION [L8, LF].)
2. Disconnect the negative battery cable.
3. Remove the under cover.

Caution

- **Water or foreign material entering the connector can cause a poor connection or corrosion. Be sure not to drop water or foreign material on the connector when disconnecting it.**

4. Disconnect the transaxle connector.

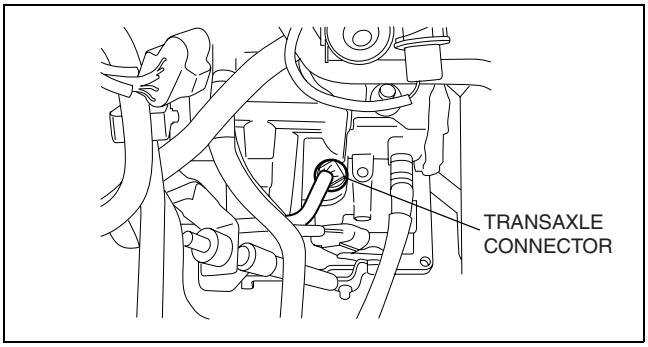

B3E0517W010

5. Measure the resistance between the transaxle connector terminals E and H.
    - If there is any malfunction, perform the off-vehicle inspection of TFT sensor. (See 05–17–18 TRANSAXLE FLUID TEMPERATURE (TFT) SENSOR REMOVAL/INSTALLATION [FN4A-EL].)

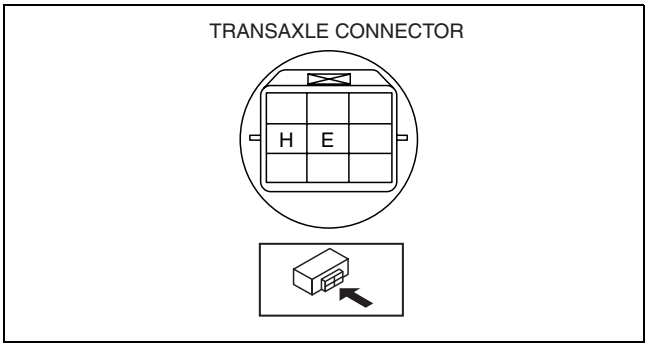

B3E0517W062

Transaxle fluid temperature (TFT) sensor

ATF temperature (°C {°F})	Resistance (kilohm)
–20 {–4}	236—324
0 {32}	84.3—110
20 {68}	33.5—42.0
40 {104}	14.7—17.9
60 {140}	7.08—8.17
80 {176}	3.61—4.15
100 {212}	1.96—2.24
120 {248}	1.13—1.28
130 {266}	0.87—0.98

6. Install the under cover.
7. Connect the negative battery cable.
8. Install the battery duct and battery cover. (See 01–17A–1 BATTERY REMOVAL/INSTALLATION [L8, LF].)

Off-Vehicle Inspection

Warning
- **A hot transaxle and ATF can cause severe burns. Turn off the engine and wait until they are cool before replacing the ATF.**

1. Remove the control valve body. (See 05–17–33 CONTROL VALVE BODY REMOVAL [FN4A-EL].)
2. Remove the coupler component.
3. Place the TFT sensor and a thermometer in ATF as shown in the figure, and heat the ATF gradually.

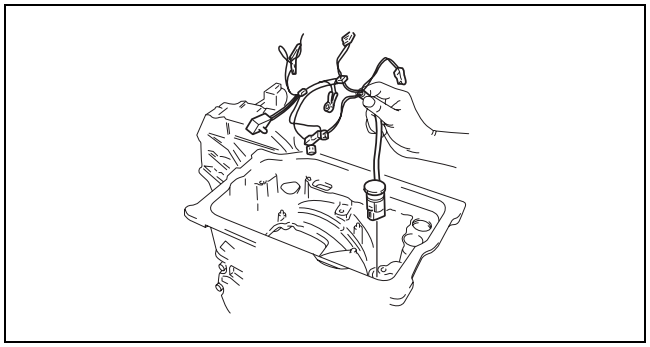

B3E0517W082

4. Measure the resistance between the terminals of the TFT sensor.
   - If there is any malfunction, replace the TFT sensor. (See 05–17–18 TRANSAXLE FLUID TEMPERATURE (TFT) SENSOR REMOVAL/INSTALLATION [FN4A-EL].)

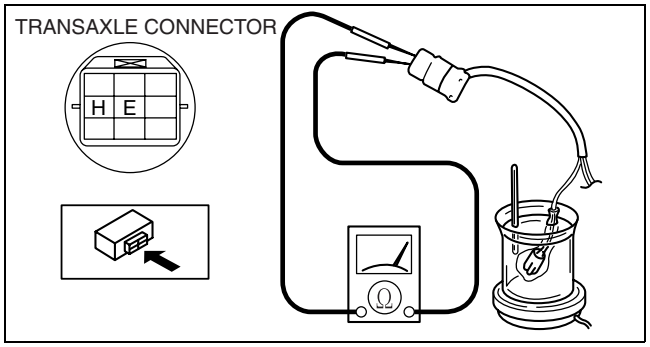

B3E0517W064

Transaxle fluid temperature (TFT) sensor

ATF temperature (°C {°F})	Resistance (kilohm)
–20 {–4}	236—324
0 {32}	84.3—110
20 {68}	33.5—42.0
40 {104}	14.7—17.9
60 {140}	7.08—8.17
80 {176}	3.61—4.15
100 {212}	1.96—2.24
120 {248}	1.13—1.28
130 {266}	0.87—0.98

5. Install the coupler component.
6. Install the control valve body. (See 05–17–34 CONTROL VALVE BODY INSTALLATION [FN4A-EL].)

TRANSAXLE FLUID TEMPERATURE (TFT) SENSOR REMOVAL/INSTALLATION [FN4A-EL]

DPE051719200W05

Warning
- **A hot transaxle and ATF can cause severe burns. Turn off the engine and wait until they are cool before replacing the ATF.**

1. Remove the oil pan. (See 05–17–33 CONTROL VALVE BODY REMOVAL [FN4A-EL].)
2. Remove the control valve body. (See 05–17–33 On-Vehicle Removal.)
3. Remove the coupler component.
4. Install a coupler component.
5. Install the control valve body. (See 05–17–34 On-Vehicle Installation.)
6. Install the oil pan. (See 05–17–34 CONTROL VALVE BODY INSTALLATION [FN4A-EL].)
7. Perform the mechanical system test. (See 05–17–3 MECHANICAL SYSTEM TEST [FN4A-EL].)

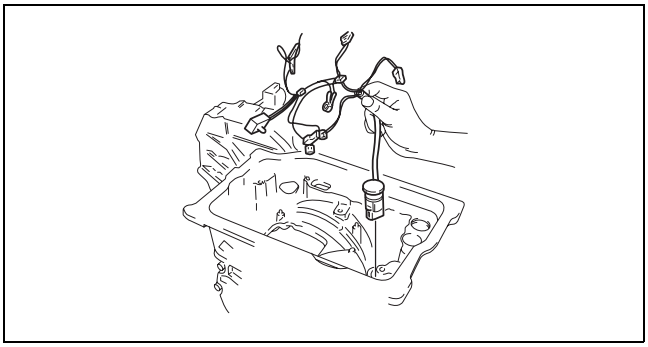

B3E0517W082

OIL PRESSURE SWITCH INSPECTION [FN4A-EL]

DPE051719200W10

Caution
- **Water or foreign material entering the connector can cause poor connection or corrosion. Be sure not to drop water or foreign material on the connector when disconnecting it.**

On-vehicle Inspection (harness inspection)
1. Remove the battery duct and battery cover. (See 01–17A–1 BATTERY REMOVAL/INSTALLATION [L8, LF].)
2. Disconnect the negative battery cable.
3. Remove the under cover.
4. Disconnect the cord assembly connector.

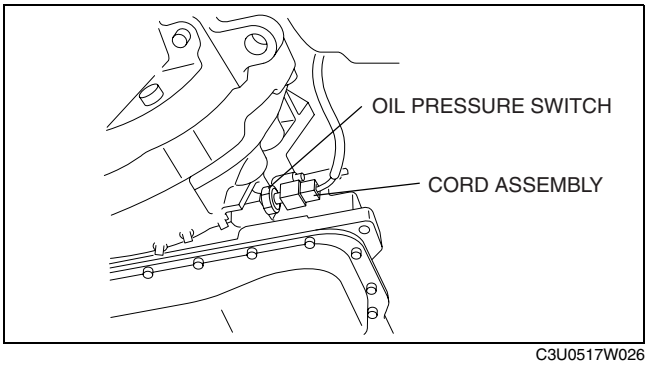

C3U0517W026

5. Verify that there is no continuity between the cord assembly terminal and ground.
   - If there is no continuity, inspect the cord assembly.
   - If the cord assembly is normal, inspect the oil pressure switch. (See 05–17–19 On-vehicle Inspection (oil pressure switch inspection).)
6. Connect the cord assembly connector.
7. Install the under cover.
8. Connect the negative battery cable.
9. Install the battery duct and battery cover. (See 01–17A–1 BATTERY REMOVAL/INSTALLATION [L8, LF].)

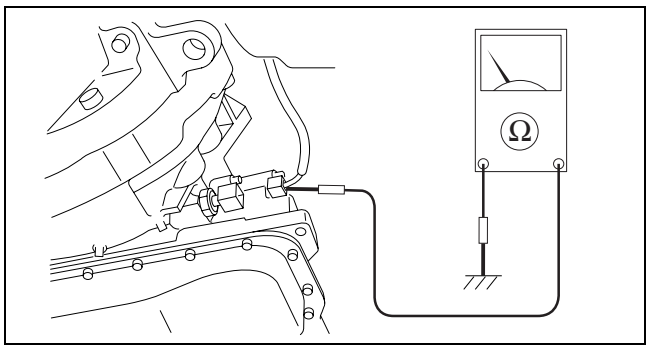

B6U0517W020

On-vehicle Inspection (oil pressure switch inspection)

1. Remove the under cover.
2. Disconnect the cord assembly connector.
3. Start the engine, with gear position in N or P.
4. Reaffirm that there is no continuity between the cord assembly terminal and ground.
5. Firmly depress the brake pedal with the left foot.
6. Shift the selector lever to D range.

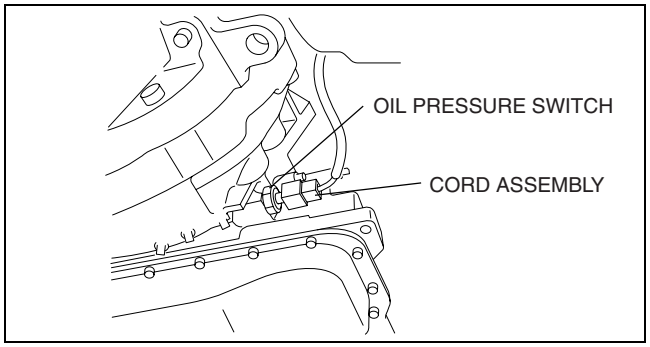

C3U0517W026

7. Verify that there is continuity between the oil pressure switch terminal and ground.
   - If there is any malfunction, replace the oil pressure switch. (See 05–17–19 OIL PRESSURE SWITCH REMOVAL/ INSTALLATION [FN4A-EL].)
8. Connect the oil pressure switch connector.
9. Install the under cover.

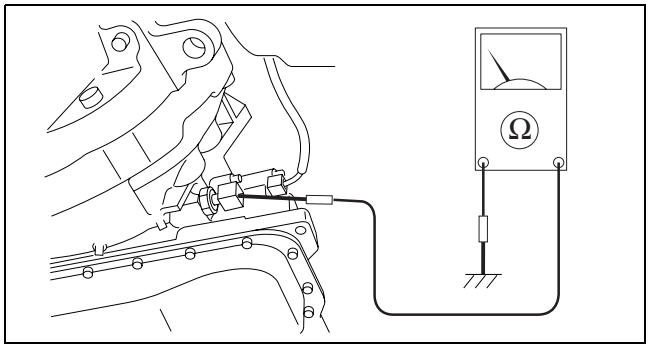

C3U0517W094

Off-vehicle inspection

1. Remove the oil pressure switch.
2. Apply air pressure at **400—440 kPa {4.1—4.4 kgf/cm^2, 58—63 psi}**
3. Inspect continuity the between the oil pressure switch terminal and screw part.
   - If there is any malfunction, replace the oil pressure switch. (See 05–17–19 OIL PRESSURE SWITCH REMOVAL/ INSTALLATION [FN4A-EL].)
4. Install the oil pressure switch.

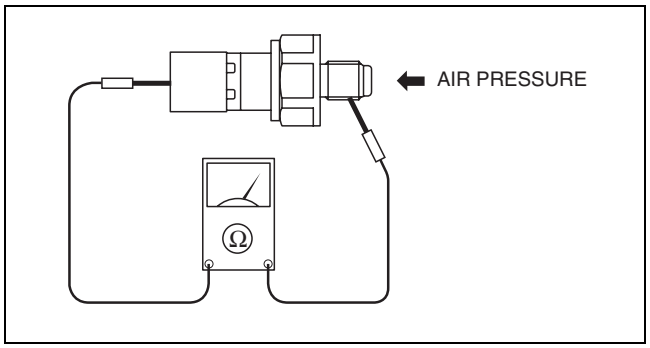

B6U0517W021

OIL PRESSURE SWITCH REMOVAL/INSTALLATION [FN4A-EL]

DPE051719200W11

Warning

- **A hot transaxle and ATF can cause severe burns. Turn off the engine and wait until they are cool before replacing the ATF.**

1. Remove the battery duct and battery cover. (See 01–17A–1 BATTERY REMOVAL/INSTALLATION [L8, LF].)
2. Disconnect the negative battery cable.
3. Remove the under cover.
4. Disconnect the cord assembly connector.
5. Remove the oil pressure switch.
6. Install the oil pressure switch.

   Tightening torque
   17.1—22.1 N·m {1.8—2.2 kgf·m, 12.7—16.2 ft·lbf}

7. Connect the oil pressure switch connector.
8. Install the under cover.
9. Connect the negative battery cable.
10. Install the battery duct and battery cover. (See 01–17A–1 BATTERY REMOVAL/INSTALLATION [L8, LF].)

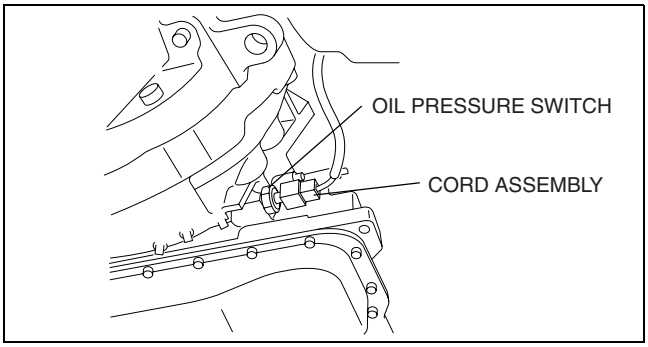

C3U0517W026

INPUT/TURBINE SPEED SENSOR INSPECTION [FN4A-EL]

DPE051719200W06

Caution
- **Water or foreign material entering the connector can cause a poor connection or corrosion. Be sure not to drop water or foreign material on the connector when disconnecting it.**

1. Remove the battery duct and battery cover. (See 01–17A–1 BATTERY REMOVAL/INSTALLATION [L8, LF].)
2. Disconnect the negative battery cable.
3. Remove the battery, battery box and battery tray. (See 01–17A–1 BATTERY REMOVAL/INSTALLATION [L8, LF].)
4. Disconnect the input/turbine speed sensor connector.

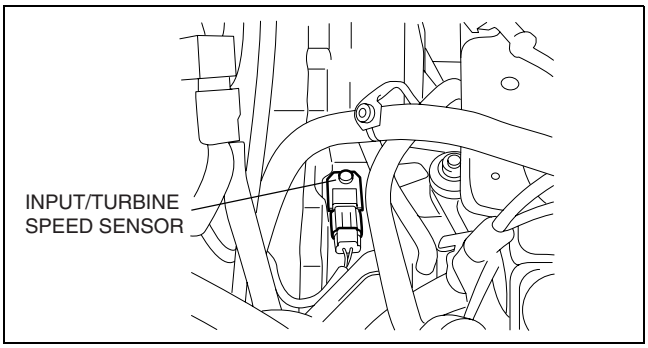

B3E0517W011

5. Measure the resistance between the input/turbine speed sensor terminals.
   - If there is any malfunction, replace the input/turbine speed sensor.

   Input/turbine speed sensor resistance
   250—600 ohms (ATF temperature: –40—160 °C {–40—320 °F})

6. Connect the input/turbine speed sensor connector.
7. Install the battery, battery box and battery tray. (See 01–17A–1 BATTERY REMOVAL/INSTALLATION [L8, LF].)
8. Connect the negative battery cable.
9. Install the battery duct and battery cover. (See 01–17A–1 BATTERY REMOVAL/INSTALLATION [L8, LF].)

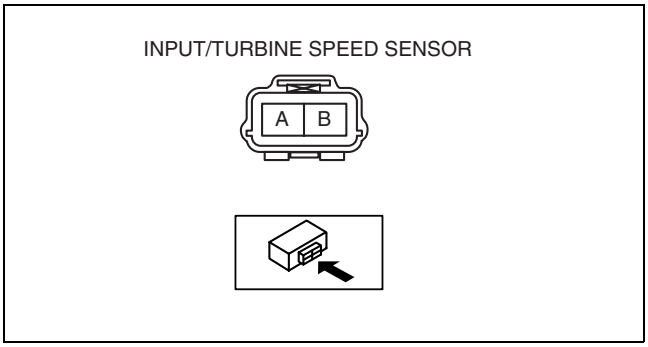

B3E0517W065

INPUT/TURBINE SPEED SENSOR REMOVAL/INSTALLATION [FN4A-EL]

DPE051719200W07

1. Remove the battery duct and battery cover. (See 01–17A–1 BATTERY REMOVAL/INSTALLATION [L8, LF].)
2. Disconnect the negative battery cable.
3. Remove the battery, battery box and battery tray. (See 01–17A–1 BATTERY REMOVAL/INSTALLATION [L8, LF].)

4. Disconnect the input/turbine speed sensor connector.
5. Remove the input/turbine speed sensor.
6. Apply ATF to a new O-ring and install it on an input/turbine speed sensor.
7. Install the input/turbine speed sensor.

   Tightening torque
   8—11 N·m {82—112 kgf·cm, 71—97 in·lbf}

8. Connect the input/turbine speed sensor connector.
9. Install the battery, battery box and battery tray. (See 01–17A–1 BATTERY REMOVAL/INSTALLATION [L8, LF].)
10. Connect the negative battery cable.
11. Install the battery duct and battery cover. (See 01–17A–1 BATTERY REMOVAL/INSTALLATION [L8, LF].)

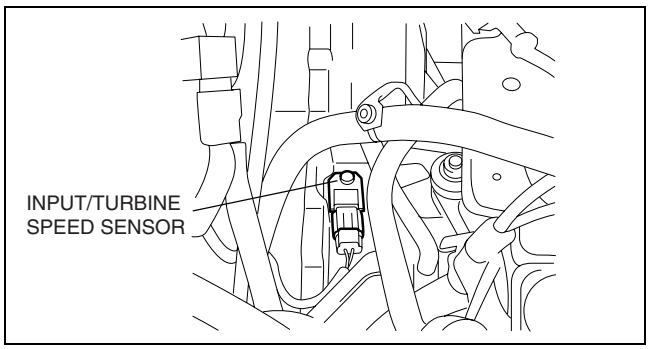

B3E0517W011

VEHICLE SPEED SENSOR (VSS) INSPECTION [FN4A-EL]

DPE051719200W08

1. Connect the WDS or equivalent, drive the vehicle, and verify the input value of the OSS PID.
   - If the input value is 0 rpm, perform the “Power Supply Voltage Inspection”, “Open Circuit Inspection”, or “Short Circuit Inspection”.
   - If the input value is other than 0 rpm, perform the “Visual Inspection” or “Wave Profile Inspection”.

Visual Inspection

1. Remove the VSS. (See 05–17–22 VEHICLE SPEED SENSOR (VSS) REMOVAL/INSTALLATION [FN4A-EL].)
2. Verify that the sensor is free of any metallic shavings or particles.
   - If there is any malfunction, clean them off.
3. Install the VSS. (See 05–17–22 VEHICLE SPEED SENSOR (VSS) REMOVAL/INSTALLATION [FN4A-EL].)

Wave Profile Inspection

1. Remove the PCM. (See 01–40A–5 PCM REMOVAL/INSTALLATION [L8, LF].)
2. Connect the WDS or equivalent to DLC-2.
3. Connect oscilloscope test leads to the following PCM connector terminals.
   - (+) lead: PCM terminal 1J
   - (–) lead: PCM terminal 1BD
4. Start the engine.
5. Monitor VSS PID.
6. Inspect wave profile.
   - PCM terminal: 1J (+)—1BD (–)
   - Oscilloscope setting: 1 V/DIV (Y), 2.5 ms/DIV (X), DC range
   - Vehicle condition: drive the vehicle with 32 km/h {20 mph}
     — If there is any malfunction, perform the “Open Circuit Inspection” or “Short Circuit Inspection”

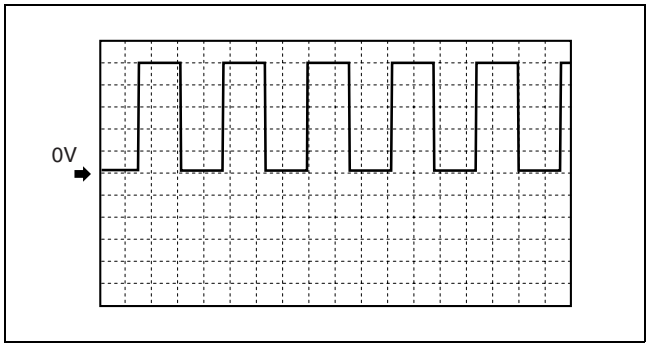

B3E0517W066

Power Supply Voltage Inspection

1. Disconnect the VSS connector.
2. Turn the ignition switch to the ON position.

3. Measure voltage at VSS terminal B.

   Vehicle speed sensor (VSS) voltage
   4.5—5.5 V

   - If voltage is normal, go to Open Circuit Inspection and Short Circuit Inspection.
   - If there is any malfunction, repair wiring harness between VSS and PCM.

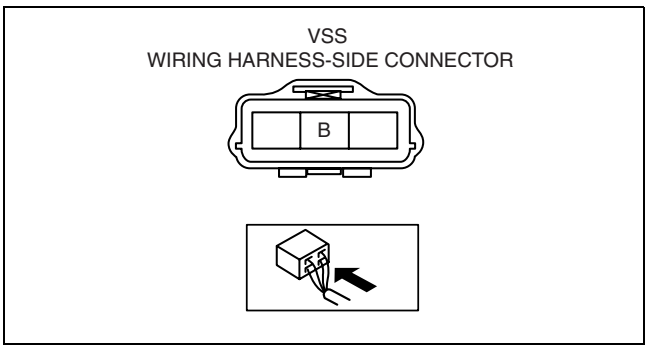

B3E0517W067

Open Circuit Inspection

1. Inspect the following circuit for open.
   - Power circuit (VSS terminal A to main relay terminal D)
   - Ground circuit (VSS terminal C to GND)
   - If an open circuit or short circuit is found, repair the malfunctioning wiring harness.
   - If there are no open or short circuits, perform the sensor rotor inspection.

Short Circuit Inspection

1. Inspect the following circuit for short circuit.
   - Power circuit (VSS terminal A to main relay terminal D)
   - If an open circuit or short circuit is found, repair the malfunctioning wiring harness.
   - If there are no open or short circuits, perform the sensor rotor inspection.

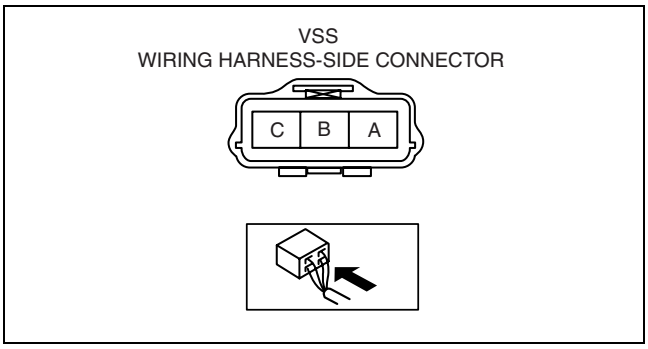

B3E0517W068

Sensor Rotor Inspection

1. Remove the VSS. (See 05–17–22 VEHICLE SPEED SENSOR (VSS) REMOVAL/INSTALLATION [FN4A-EL].)
2. Shift the selector lever to N position.
3. Inspect sensor rotor surface via VSS installation hole while rotating the front tire manually.
   (1) Is sensor rotor free of damage and cracks?
   (2) Is sensor rotor free of any metallic shavings or particles?
      - If sensor rotor is normal, replace the VSS.
      - If there is any malfunction, clean or replace the sensor rotor.

VEHICLE SPEED SENSOR (VSS) REMOVAL/INSTALLATION [FN4A-EL]

DPE051719200W09

Caution

- **Water or foreign material entering the connector can cause a poor connection or corrosion. Be sure not to drop water or foreign material on the connector when disconnecting it.**
- **If foreign materials are stuck to the VSS, disturbance by magnetic flux can cause sensor output to be abnormal and thereby negatively affect control. Make sure that foreign materials such as iron filings are not stuck to the VSS during installation.**

1. Remove the battery duct and battery cover. (See 01–17A–1 BATTERY REMOVAL/INSTALLATION [L8, LF].)
2. Disconnect the negative battery cable.
3. Remove the under cover.
4. Disconnect the VSS connector.

5. Remove the VSS.
6. Apply ATF to a new O-ring and install it on a new VSS.

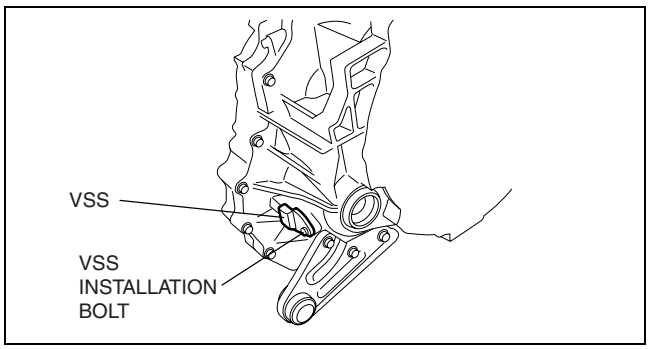

B3E0517W012

7. Install the VSS.

   Tightening torque
   8—11 N·m {82—112 kgf·cm, 71—97 in·lbf}

8. Connect the VSS connector.
9. Install the under cover.
10. Connect the negative battery cable.
11. Install the battery duct and battery cover. (See 01–17A–1 BATTERY REMOVAL/INSTALLATION [L8, LF].)

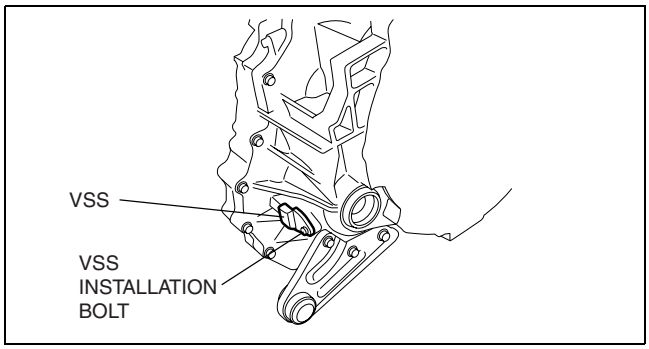

B3E0517W012

SOLENOID VALVE INSPECTION [FN4A-EL]

DPE051721101W01

Resistance Inspection (On-Vehicle Inspection)

Caution
- **Water or foreign material entering the connector can cause a poor connection or corrosion. Be sure not to drop water or foreign material on the connector when disconnecting it.**

1. Remove the battery duct and battery cover. (See 01–17A–1 BATTERY REMOVAL/INSTALLATION [L8, LF].)
2. Disconnect the negative battery cable.
3. Remove the under cover.
4. Disconnect the transaxle connector.

   Note
   - When inspecting the pressure control solenoid, connect the ground connection to the ground terminal (terminal I) of the pressure control solenoid inside the solenoid valve connector.

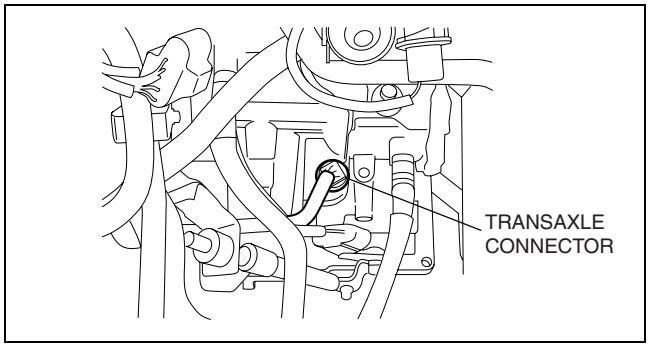

B3E0517W010

5. Measure the resistance between the following terminals.
   - If there is any malfunction, inspect the ground, then perform the operating inspection.

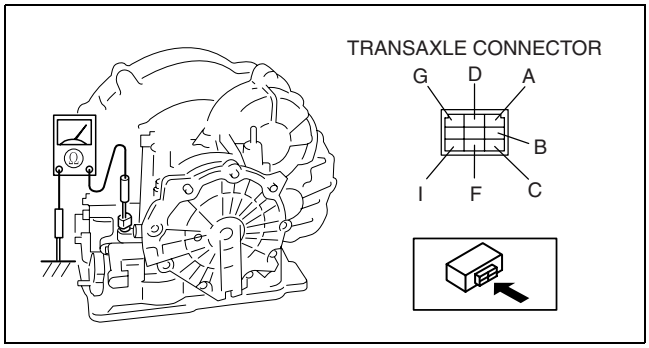

B3E0517W069

Solenoid valve resistance (ATF temperature: –40—150 °C {–40—302 °F}

Terminal	Solenoid valve	Resistance (ohm)
A—GND	Shift solenoid A	1.0—4.2
C—GND	Shift solenoid B	1.0—4.2
G—GND	Shift solenoid C	1.0—4.2
B—GND	Shift solenoid D	10.9—26.2
F—GND	Shift solenoid E	10.9—26.2
D—I	Pressure control	2.4—7.3

6. Connect the transaxle connector.
7. Install the under cover.
8. Connect the negative battery cable.
9. Install the battery duct and battery cover. (See 01–17A–1 BATTERY REMOVAL/INSTALLATION [L8, LF].)

Operating Inspection

1. Disconnect the transaxle connector.

   Caution
   - **Do not apply battery position voltage to terminals A, B, C, D, F and G for more than 3 s.**

   Note
   - Because the operation sound of the valves is small, perform inspection in a quiet place.

2. Apply battery positive voltage to the transaxle connector terminals A, B, C, F or G and battery negative voltage to GND, and verify that operating sound is heard from the solenoid.
   - If the “click” is not heard, inspect the transaxle harness.
     — If the transaxle harness is normal, perform the resistance inspection (off-vehicle inspection).
     — If there is any malfunction, repair or replace the transaxle harness.
3. Apply battery positive voltage to the transaxle connector terminal D and battery negative voltage to the transaxle connector terminal I, and verify that operating sound is heard from solenoid.
   - If the “click” is not heard, inspect the transaxle harness.
     — If transaxle harness is normal, perform the resistance inspection (off-vehicle inspection).
     — If there is any malfunction, repair or replace the transaxle harness.

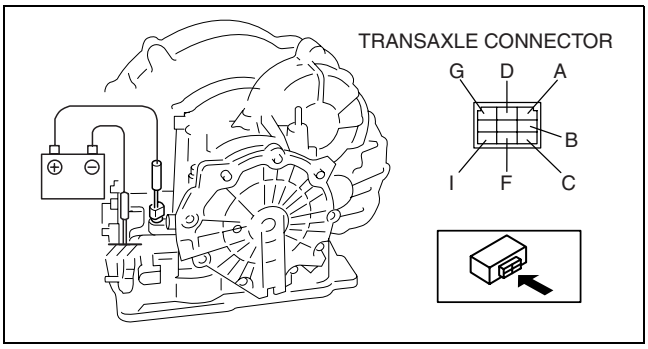

B3E0517W070

Resistance Inspection (Off-Vehicle Inspection)

1. Remove the control valve body. (See 05–17–25 SOLENOID VALVE REMOVAL/INSTALLATION [FN4A-EL].)
2. Measure the resistance of each solenoid valve individually.
   - If there is any malfunction, replace the solenoid valve.
3. Install the control valve body. (See 05–17–25 SOLENOID VALVE REMOVAL/INSTALLATION [FN4A-EL].)

Pressure control solenoid

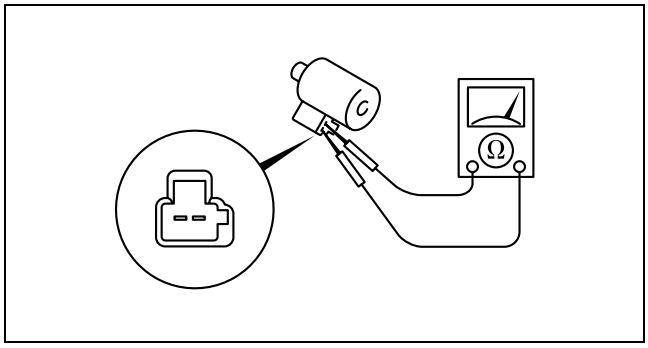

ADJ5614W125

Resistance
2.4—7.3 ohms
(ATF temperature: –40—150 °C {–40—302 °F})

Shift solenoid A, B, C

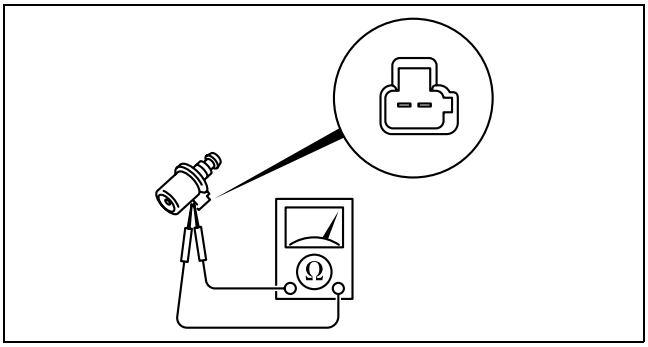

B3E0517W071

Resistance
1.0—4.2 ohms
(ATF temperature: –40—150 °C {–40—302 °F})

Shift solenoid D, E

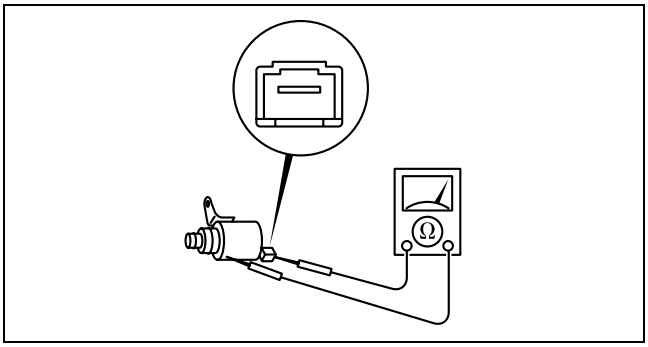

B6U0517W134

Resistance
10.9—26.2 ohms
(ATF temperature: –40—150 °C {–40—302 °F})

SOLENOID VALVE REMOVAL/INSTALLATION [FN4A-EL]

DPE051721101W02

1. Remove the battery duct and battery cover. (See 01–17A–1 BATTERY REMOVAL/INSTALLATION [L8, LF].)
2. Disconnect the negative battery cable.
3. Remove the under cover.
4. Remove the control valve body. (See 05–17–33 CONTROL VALVE BODY REMOVAL [FN4A-EL].)
5. Remove the solenoid valve(s).
6. Apply ATF to a new O-ring and install it on the solenoid valve.

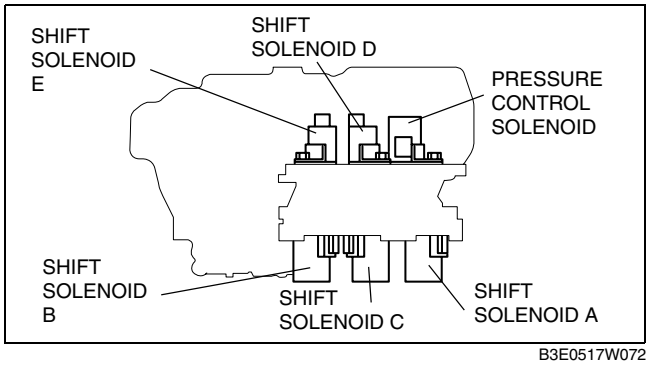

B3E0517W072

7. Install the solenoid valve in the control valve body.

   Tightening torque
   7.8—10.8 N·m {80—110 kgf·cm, 69.5—95.4 in·lbf}

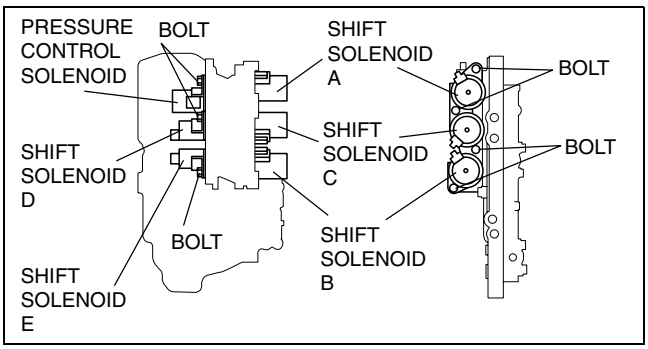

B3E0517W073

8. Install the control valve body. (See 05–17–33 CONTROL VALVE BODY REMOVAL [FN4A-EL].)
9. Install the under cover.
10. Connect the negative battery cable.
11. Install the battery duct and battery cover. (See 01–17A–1 BATTERY REMOVAL/INSTALLATION [L8, LF].)
12. Add ATF and, with the engine idling, inspect the ATF level and inspect for leakage. (See 05–17–8 Automatic Transaxle Fluid (ATF) Level Inspection.)
13. Perform the mechanical system test. (See 05–17–3 MECHANICAL SYSTEM TEST [FN4A-EL].)

PCM INSPECTION [FN4A-EL]

DPE051718880W01

1. Inspect the PCM. (See 01–40A–7 PCM INSPECTION [L8, LF].)

PCM REMOVAL/INSTALLATION [FN4A-EL]

DPE051718880W02

1. Remove and install the PCM. (See 01–40A–5 PCM REMOVAL/INSTALLATION [L8, LF].)

AUTOMATIC TRANSAXLE REMOVAL/INSTALLATION [FN4A-EL]

DPE051700000W09

1. Remove the battery duct and battery cover. (See 01–17A–1 BATTERY REMOVAL/INSTALLATION [L8, LF].)
2. Disconnect the negative battery cable.
3. Remove the following parts:
   (1) Battery, battery tray and battery box (See 01–17A–1 BATTERY REMOVAL/INSTALLATION [L8, LF].)
   (2) Air cleaner component (See 01–13A–4 INTAKE AIR SYSTEM REMOVAL/INSTALLATION [L8, LF].)
   (3) Windshield wiper arm and blade (See 09–19–3 WINDSHIELD WIPER ARM AND BLADE REMOVAL/INSTALLATION.)
   (4) Cowl grille (See 09–16–2 COWL GRILLE REMOVAL/INSTALLATION.)
   (5) Cowl panel (See 09–10–11 COWL PANEL REMOVAL/INSTALLATION.)
   (6) Exhaust manifold insulator
   (7) Front tires and splash shield
   (8) Under cover
4. Drain the ATF. (See 05–17–9 AUTOMATIC TRANSAXLE FLUID (ATF) REPLACEMENT [FN4A-EL].)

   Warning
   - **Improperly jacking a transaxle is dangerous. It can slip off the jack and may cause serious injury.**

   Caution
   - **To prevent the torque converter and transaxle from separating, remove the transaxle without tilting it toward the torque converter.**

5. Remove in the order indicated in the table.
6. Install in the reverse order of removal.
7. Add ATF to the specified level. (See 05–17–9 AUTOMATIC TRANSAXLE FLUID (ATF) REPLACEMENT [FN4A-EL].)
8. Perform the following test. (See 05–17–3 MECHANICAL SYSTEM TEST [FN4A-EL].) (See 05–17–6 ROAD TEST [FN4A-EL].)

Service item	Test item			
	Line pressure test	Stall test	Time lag test	Road test
ATX replacement	X			
ATX overhaul	X	X	X	X
Torque converter replacement	X	X		
Oil pump replacement	X			
Clutch system replacement	X		X	X

X : Test to be performed after the service work

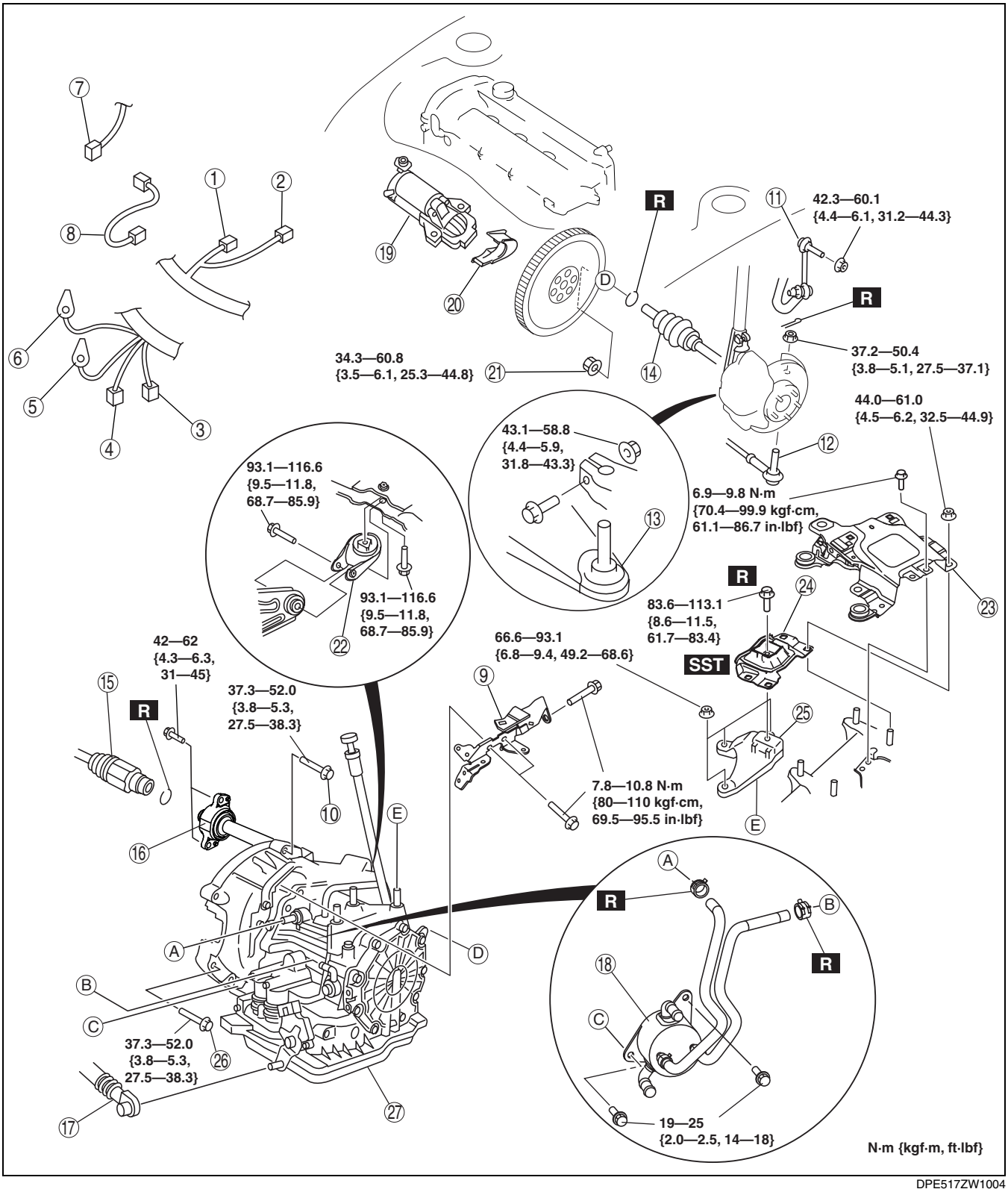

DPE517ZW1004

1	Input/turbine speed sensor connector
2	VSS connector
3	Transaxle connector
4	TR switch connector
5	GND wiring harness
6	GND wiring harness

7	Oil pressure switch connector (for oil filter)
8	Oil pressure switch connector (for ATX)
9	Harness bracket (See 05–17–32 Harness Bracket Installation Note.)
10	Transaxle mounting bolt (upper side)
11	Stabilizer control link

12	Tie-rod end ball joint (See 06-14–11 STEERING GEAR AND LINKAGE REMOVAL/INSTALLATION.)
13	Lower arm ball joint (See 02–13–7 FRONT LOWER ARM REMOVAL/ INSTALLATION.)
14	Drive shaft (See 03–13–7 DRIVE SHAFT REMOVAL/ INSTALLATION.)
15	Drive shaft (See 03–13–7 DRIVE SHAFT REMOVAL/ INSTALLATION.)
16	Joint shaft (See 03–13–2 JOINT SHAFT REMOVAL/ INSTALLATION [L8, LF].)
17	Selector cable
18	Oil cooler (See 05–17–37 OIL COOLER REMOVAL/ INSTALLATION [FN4A-EL].)
19	Starter (See 01–19A–1 STARTER REMOVAL/ INSTALLATION [L8, LF].)
20	End plate cover
21	Torque converter installation nuts (See 05–17–28 Torque Converter Nuts Removal Note.) (See 05–17–32 Torque Converter Nuts Installation Note.)
22	No.1 engine mount rubber (See 05–17–31 No.1 Engine Mount and No.4 Engine Mount Installation Note.)
23	Battery tray bracket
24	No.4 engine mount rubber (See 05–17–29 No.4 Engine Mount Removal Note.) (See 05–17–31 No.1 Engine Mount and No.4 Engine Mount Installation Note.)
25	No.4 engine mount bracket (See 05–17–29 No.4 Engine Mount Removal Note.) (See 05–17–31 No.1 Engine Mount and No.4 Engine Mount Installation Note.)
26	Transaxle mounting bolt (lower side)
27	Transaxle (See 05–17–30 Transaxle Removal Note.) (See 05–17–30 Transaxle Installation Note.)

Torque Converter Nuts Removal Note

1. Hold the crankshaft pulley to prevent the drive plate from rotating.

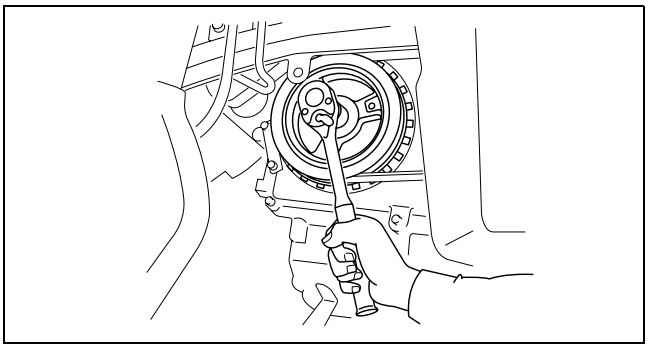

A6E5614W091

2. Remove the torque converter nuts from the starter installation hole.

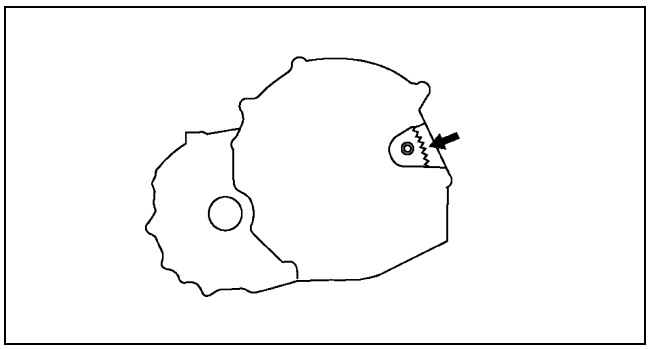

A6E5614W092

No.4 Engine Mount Removal Note

1. Install the **SST** using the following procedure.
   (1) Align the rear support rod hole to the bolt on the shock absorber as shown in the figure.

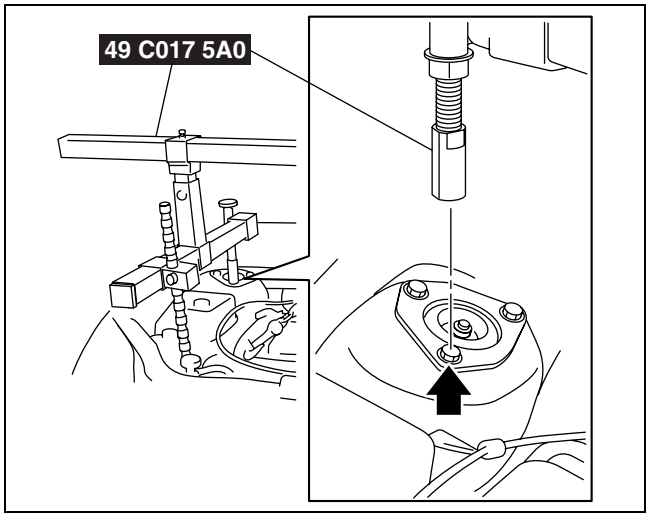

DPE515BW1002

   (2) Align the front support rod groove to the folded part of the frame as shown in the figure.

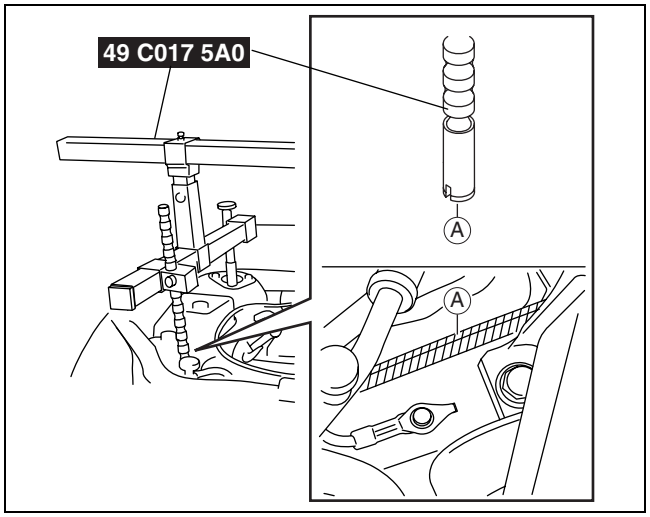

DPE515BW1003

2. Support the engine using the **SST**.

   Note
   - A hoist or small crane can be used in place of the **SST** (49 C017 5A0).

3. Remove the battery tray bracket, No.4 engine mount rubber and bracket.

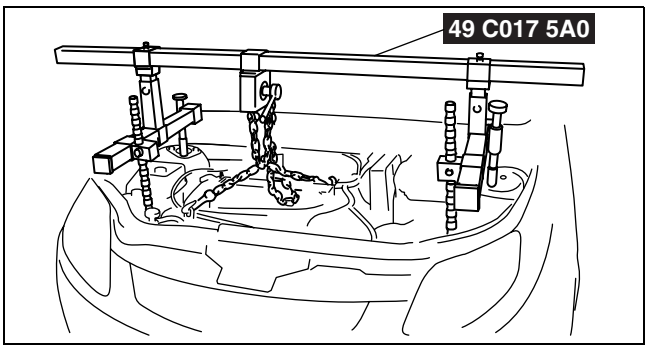

DPE515AW1002

Transaxle Removal Note

1. Adjust the **SST** and lean the engine toward the transaxle.
2. Support the transaxle on a jack.
3. Remove the transaxle mounting bolts.

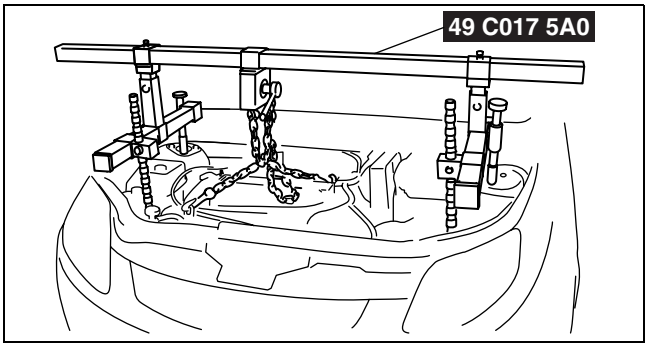

DPE515AW1002

4. Remove the transaxle.

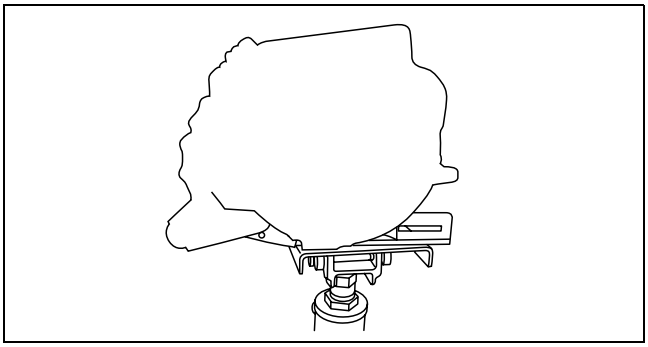
B3E0517W025

Transaxle Installation Note

1. Set the transaxle on a jack and lift it.
2. Install the transaxle mounting bolts.

   Tightening torque
   37.3—52.0 N·m {3.8—5.3 kgf·m, 27.5—38.3 ft·lbf}

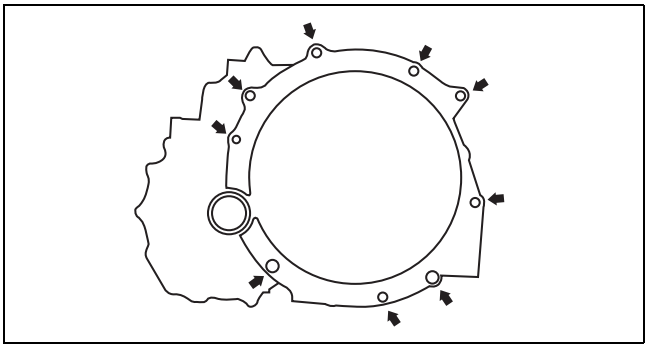
C3U0517W023

No.1 Engine Mount and No.4 Engine Mount Installation Note

1. Install the No.4 engine mount bracket on the transaxle case and tighten nuts.

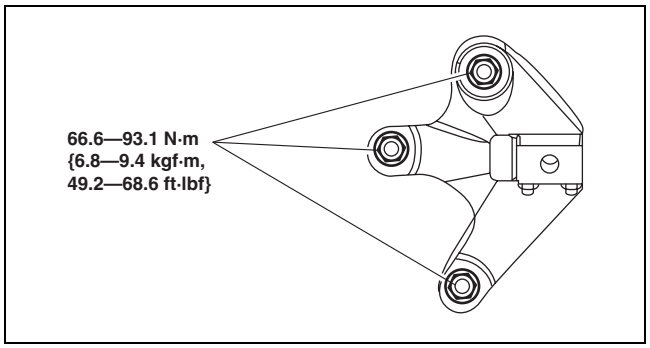

B3E0517W023

2. Install the No.1 engine mount rubber to the crossmember and temporarily tighten bolts.

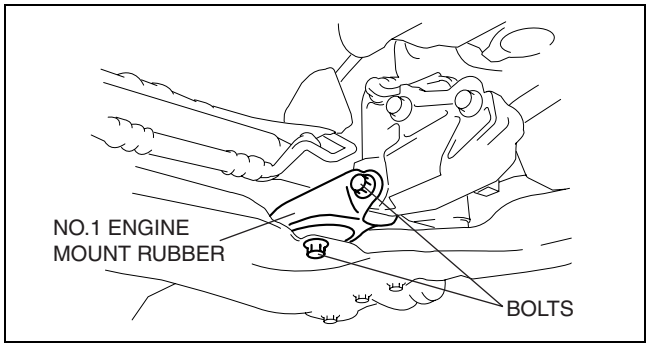

B3E0515W010

3. Place the No.4 engine mount rubber with the body stud bolts passing through the holes and tighten the new bolt as shown in the figure.

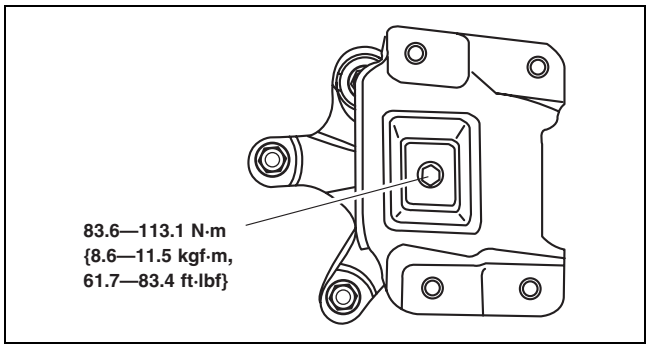

C3U0517W096

4. Place the battery tray bracket on the No.4 engine mount rubber with body stud bolts passing through the holes and tighten bolts and nuts in the order as shown in the figure.
5. Remove the **SSTs**.

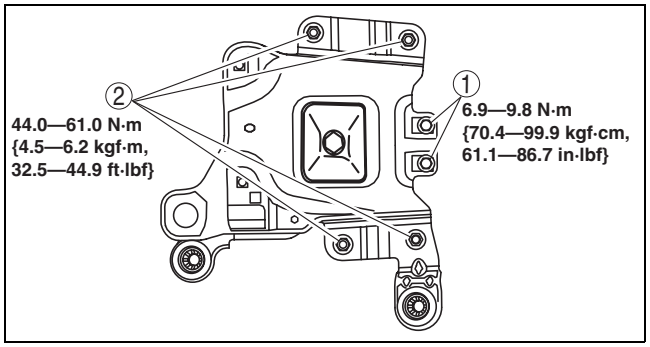

DPE517ZW1008

6. Fully tighten the bolts.

Caution
- **Tighten the bolts in the order shown in the figure to prevent abnormal noise and vibration after assembly.**

Tightening torque
93.1—116.6 N·m {9.5—11.8 kgf·m, 68.7—85.9 ft·lbf}

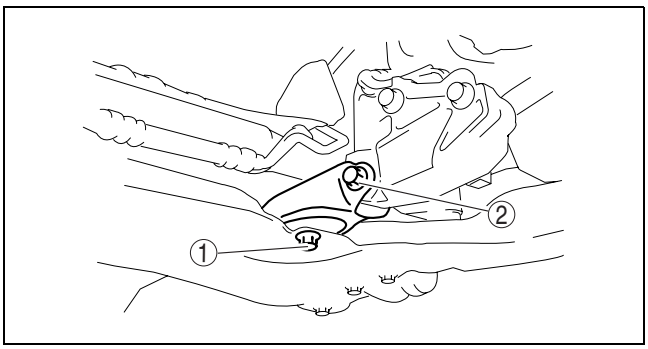

C3E515AW3001

Torque Converter Nuts Installation Note

1. Hold the crankshaft pulley to prevent the drive plate from rotating.

Caution
- **Loosely and equally tighten the torque converter nuts, then further tighten them to the specified tightening torque.**

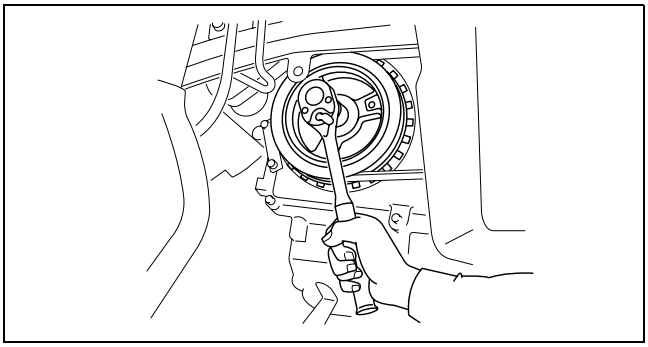
A6E5614W091

2. Tighten the torque converter mounting nuts.

Tightening torque
34.3—60.8 N·m {3.5—6.1 kgf·m, 25.3—44.8 ft·lbf}

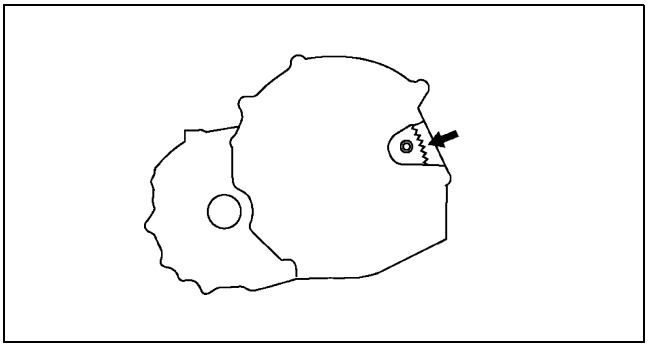
A6E5614W092

Harness Bracket Installation Note

1. Install the harness bracket and temporarily tighten bolt A and B.
2. Fully tighten the bolt C.
3. Fully tighten the bolt A and B.

Tightening torque
7.8—10.8 N·m {80—110 kgf·cm, 69.5—95.5 in·lbf}

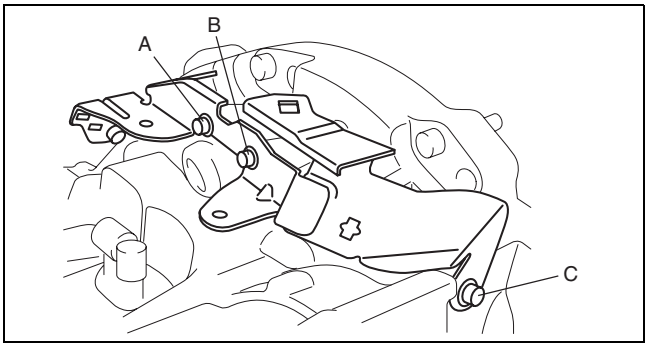

CPJ517ZWB017

OIL SEAL REPLACEMENT [FN4A-EL]

DPE051727238W01

1. Drain the ATF. (See 05–17–9 AUTOMATIC TRANSAXLE FLUID (ATF) REPLACEMENT [FN4A-EL].)

Caution
- **The oil seal is easily damaged by the sharp edges of the drive shaft splines. Do not let the splines contact the oil seal.**

2. Remove the drive shaft and joint shaft. (See 03–13–7 DRIVE SHAFT REMOVAL/INSTALLATION.) (See 03–13–2 JOINT SHAFT REMOVAL/INSTALLATION [L8, LF].)

3. Remove the oil seal.
4. Using the **SST** and a hammer, tap a new oil seal in evenly until the **SST** contacts the transaxle case.
5. Coat the lip of the oil seal with transaxle oil.
6. Install the drive shaft and joint shaft. (See 03–13–7 DRIVE SHAFT REMOVAL/INSTALLATION.) (See 03–13–2 JOINT SHAFT REMOVAL/INSTALLATION [L8, LF].)
7. Add ATF to the specified level. (See 05–17–9 AUTOMATIC TRANSAXLE FLUID (ATF) REPLACEMENT [FN4A-EL].)
8. Perform the mechanical system test. (See 05–17–3 MECHANICAL SYSTEM TEST [FN4A-EL].)

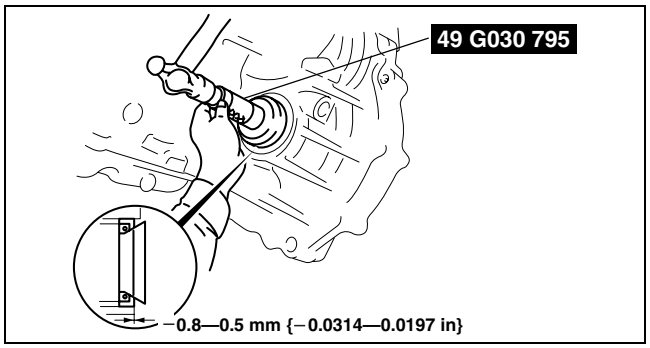

B3E0517W090

CONTROL VALVE BODY REMOVAL [FN4A-EL]

DPE051721100W01

On-Vehicle Removal

Warning
- **Using compressed air can cause dirt and other particles to fly out, causing injury to the eyes. Wear protective eyeglasses whenever using compressed air.**

Caution
- **Clean the transaxle exterior throughout with a steam cleaner or cleaning solvents before removal.**
- **If any old sealant gets into the transaxle during installation of the oil pan, trouble may occur in the transaxle case and oil pan. Clean with cleaning fluids.**

1. Remove the battery duct and battery cover. (See 01–17A–1 BATTERY REMOVAL/INSTALLATION [L8, LF].)
2. Disconnect the negative battery cable.
3. Drain the ATF into a separate suitable container. (See 05–17–9 AUTOMATIC TRANSAXLE FLUID (ATF) REPLACEMENT [FN4A-EL].)
4. Remove the under cover.
5. Remove the oil pan.
6. Disconnect the solenoid connectors and GND.
7. Remove the oil strainer.

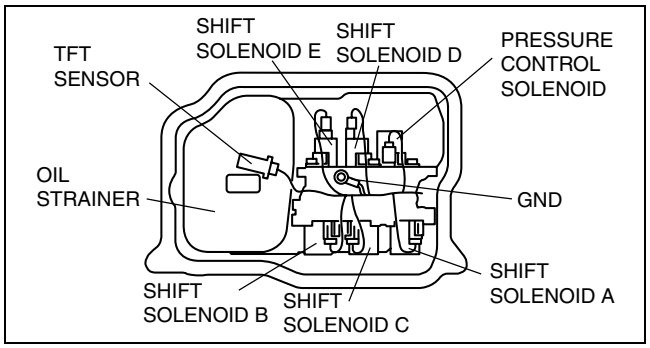

ADA5614W018

8. Remove the control valve body installation bolts as shown in the figure, then remove the control valve body component as shown in the figure.

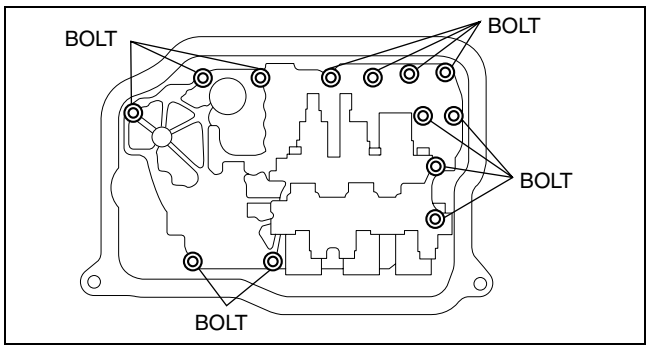

B3E0517W074

9. Remove the accumulators and accumulator springs.

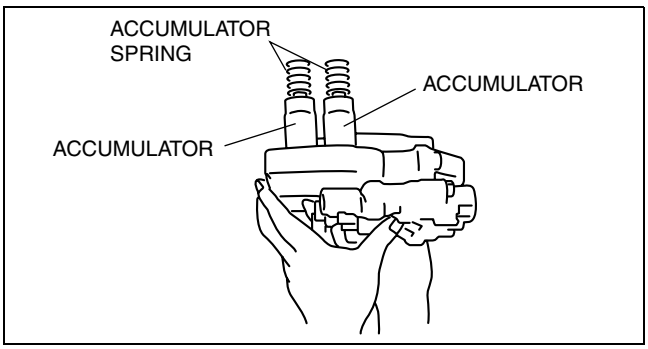

B3E0517W075

CONTROL VALVE BODY INSTALLATION [FN4A-EL]

DPE051721100W02

On-Vehicle Installation

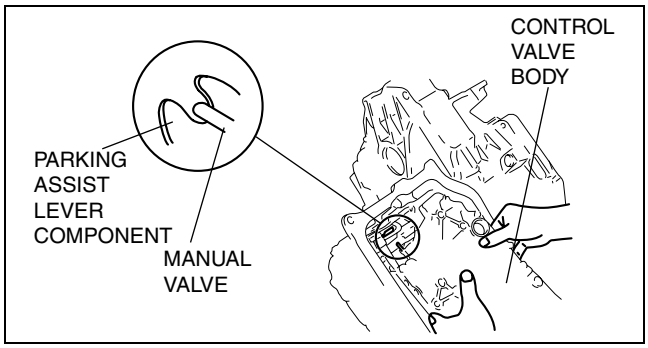

B6U0517W023

Caution

- **Be sure to align the parking rod and the manual valve.**

1. Install the accumulator springs and accumulators into the transaxle case.

Spring	Outer diameter (mm {in})	Free Length (mm {in})	No. of coils	Wire diameter (mm {in})
Servo apply accumulator large spring	21.0 {0.827}	67.8 {2.669}	10.3	3.5 {0.138}
Servo apply accumulator small spring	13.0 {0.512}	67.8 {2.669}	17.1	2.2 {0.087}
Forward accumulator small spring	21.0 {0.827}	75.0 {2.953}	10.7	2.3 {0.091}
Forward accumulator large spring	15.6 {0.614}	49.0 {1.929}	7.7	2.4 {0.094}

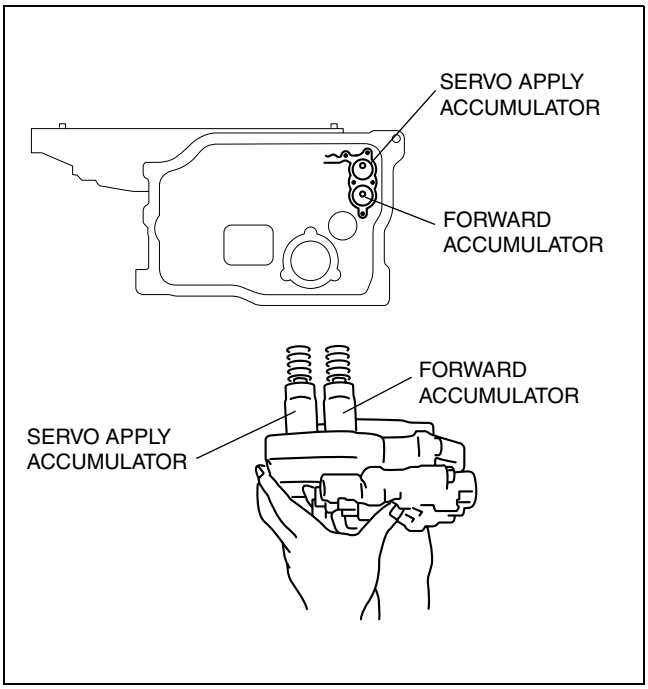

B3E0517W076

2. Install the control valve body component.

   Tightening torque
   7.8—10.8 N·m {80—110 kgf·cm, 70—95 in·lbf}

   Bolt length (measured from below the head)
   Mark B: 40 mm {1.575 in}
   No mark: 70 mm {2.756 in}

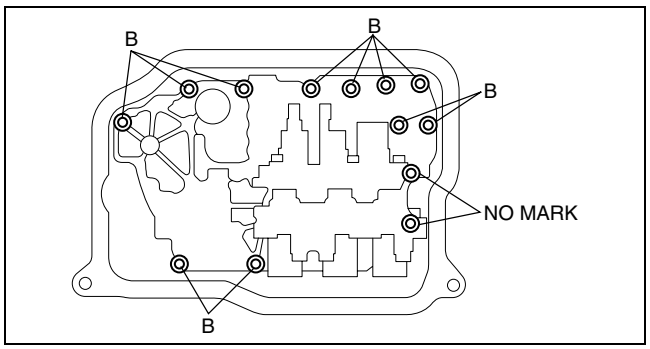

A6E5614W062

3. Install the oil strainer.
4. Match the harness colors, then connect the solenoid connectors and GND, and install the TFT sensor.

Spring	Color of connector (harness side)
Pressure control solenoid	Black
Shift solenoid A	White
Shift solenoid B	Blue
Shift solenoid C	Green
Shift solenoid D	White
Shift solenoid E	Black

5. Install the GND.

   Tightening torque
   8—11 N·m {82—112 kgf·cm, 71—97 in·lbf]

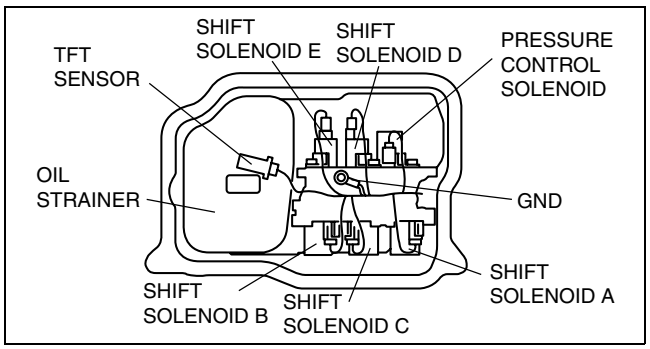

ADA5614W018

6. Apply a light coat of silicon sealant to the contact surfaces of the oil pan and transaxle case.
7. Install the oil pan.

   Tightening torque
   6—8 N·m {62—81 kgf·cm, 53—70 in·lbf}

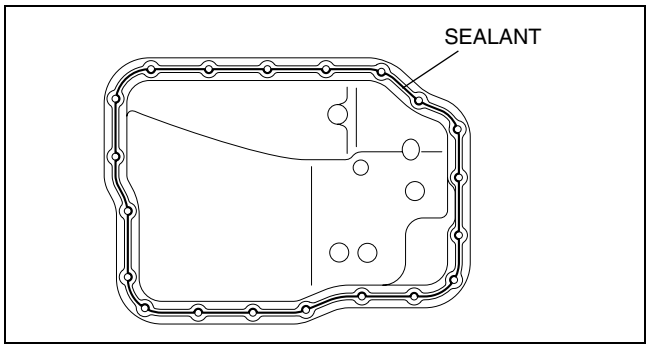

B3E0517W077

8. Install the under cover.
9. Connect the negative battery cable.
10. Install the battery duct and battery cover. (See 01–17A–1 BATTERY REMOVAL/INSTALLATION [L8, LF].)
11. Add ATF and with the engine idling, inspect the ATF level. (See 05–17–9 AUTOMATIC TRANSAXLE FLUID (ATF) REPLACEMENT [FN4A-EL].)
12. Perform the mechanical system test. (See 05–17–3 MECHANICAL SYSTEM TEST [FN4A-EL].)

OIL COOLER FLUSHING [FN4A-EL]

DPE051719900W01

Note
- The contaminated cooler line (oil pipes and hoses) and oil cooler must be flushed completely when ATX is overhauled or replaced.

1. Remove the two oil cooler line hoses and apply air pressure of **196 kPa {2.0 kgf/cm^2, 28 psi}** from the return hose (pipe) side.

   Caution
   - **Power flushing should be performed very carefully when removing the accumulated debris from the fluid baffle, otherwise the debris cannot be removed or the problem becomes even worse.**

2. If there is no air blown out the feed side, flush the oil cooler lines using the power-flushing tool. (See 05–17–36 Power Flushing.)

Recommended power-flushing manufacturer

Manufacturer	Part number	Description
Kent Moore	J35944-AMAZ	Flushing kit or equivalent
OTC	60081	Portable torque converter, oil cooler cleaner or equivalent

3. If there is ventilation, perform the following steps.

   (1) Remove the oil pan and inspect the fluid filter element from the front filter.
   (2) If the element is covered with too much debris or particles and cannot be seen, replace the oil cooler. (See 05–17–37 OIL COOLER REMOVAL/INSTALLATION [FN4A-EL].)
   (3) If the element can be seen, flush the oil cooler lines using the power-flushing tool.
   - Performing back and reverse power flushing two times each does not work because debris or particles flow out from the feed pipe side of ATX.

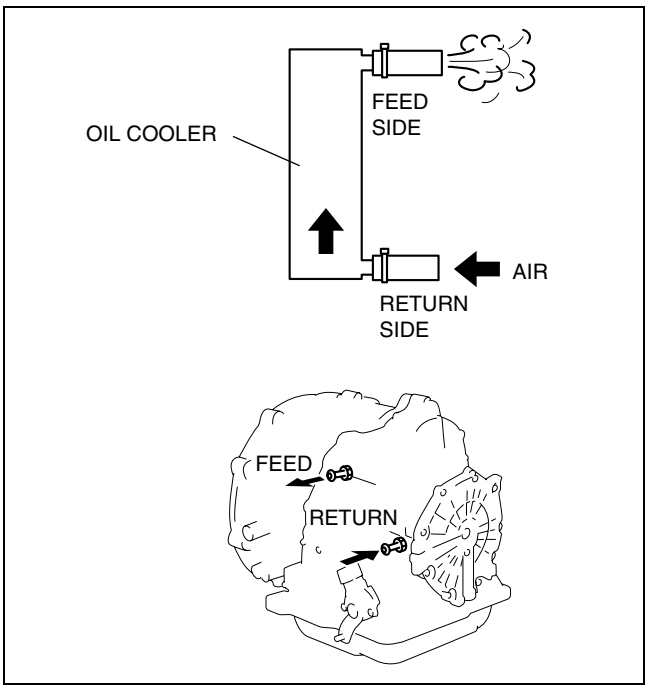

B3E0517W078

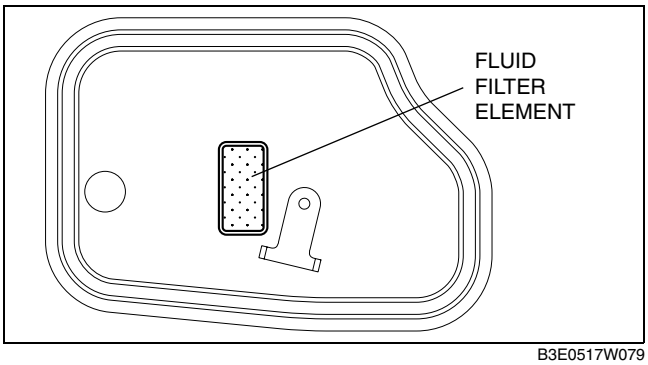

B3E0517W079

Power Flushing
Repair procedure

1. Before power flushing, inspect the hoses/lines and clamps. Power flushing must begin with back flushing followed by forward flushing to quickly dislodge the restriction. If back flushing is not performed before forward flushing, the restriction could further reduce the ATF flow through the internal mesh type baffle of the cooler and flushing will not be effective or possible.

Inspecting oil lines and clamps

1. Be sure to inspect the lines (hoses/pipes) for cuts, crimps (pinched), cracks or any other damage before reusing them.
   - If there is any malfunction, replace lines and clamps.

   Caution
   - **Always use new clamps when replacing hoses.**

Back flushing

1. Using the power flushing equipment manufacturer's instructions, connect equipment so the flushing fluid flows in the opposite direction of normal fluid flow.
2. Flush oil cooler/lines until discharge fluid is clean.

Caution

- **If the cooler can not be properly flushed using recommended equipment, send the oil cooler out for sublet cleaning or replace.**

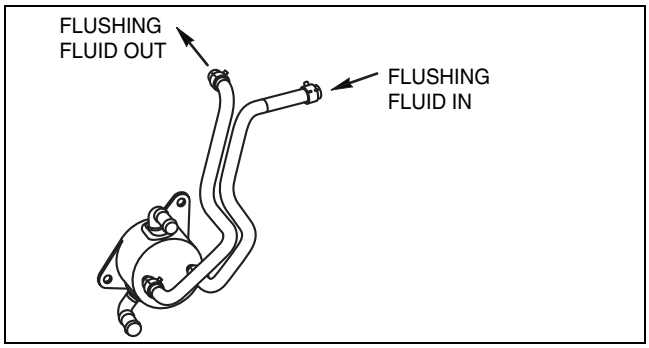

C3U0517W041

Forward flushing

1. Connect power flushing equipment so the flushing fluid flows in the direction of normal fluid flow.
2. Flush oil cooler/lines until discharge fluid is clean.

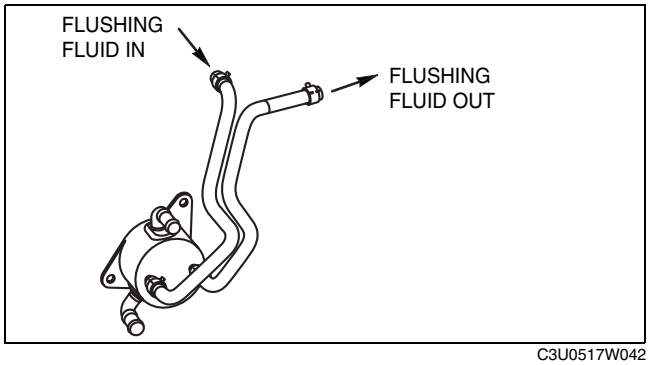

C3U0517W042

OIL COOLER REMOVAL/INSTALLATION [FN4A-EL]

DPE051719900W03

1. Remove the battery duct and battery cover. (See 01–17A–1 BATTERY REMOVAL/INSTALLATION [L8, LF].)
2. Disconnect the negative battery cable.
3. Remove the aircleaner component. (See 01–13A–4 INTAKE AIR SYSTEM REMOVAL/INSTALLATION [L8, LF].)
4. Remove the under cover.
5. Drain the engine coolant. (See 01–12A–3 ENGINE COOLANT REPLACEMENT [L8, LF].)
6. Drain the ATF into a container. (See 05–17–9 AUTOMATIC TRANSAXLE FLUID (ATF) REPLACEMENT [FN4A-EL].)
7. Disconnect the water hose.
8. Remove in the order indicated in the table.
9. Install in the reverse order of removal.
10. Refill the engine coolant. (See 01–12A–3 ENGINE COOLANT REPLACEMENT [L8, LF].)
11. Inspect the engine coolant leakage. (See 01–12A–4 ENGINE COOLANT LEAKAGE INSPECTION [L8, LF].)
12. Add ATF to the specified level. (See 05–17–9 AUTOMATIC TRANSAXLE FLUID (ATF) REPLACEMENT [FN4A-EL].)
13. Inspect for oil leakage from the oil pipes and oil hoses.
14. Inspect for coolant from the hoses.
15. Inspect the ATF level and condition. (See 05–17–7 AUTOMATIC TRANSAXLE FLUID (ATF) INSPECTION [FN4A-EL].)
16. Perform the line pressure test. (See 05–17–3 MECHANICAL SYSTEM TEST [FN4A-EL].)

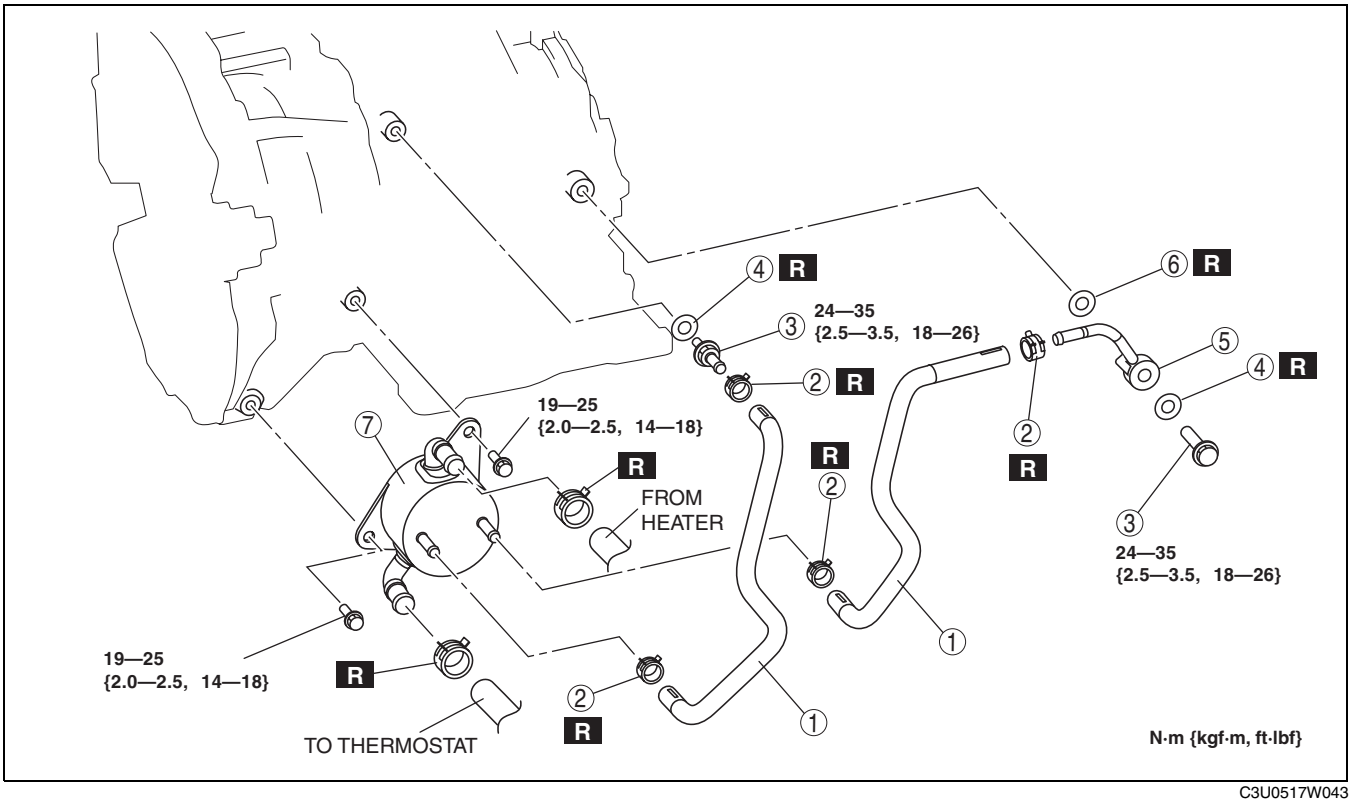

C3U0517W043

1	Oil hose (See 05–17–38 Oil Pipe, Hose Clamp, Oil Hose Installation Note.)
2	Hose clamp (See 05–17–38 Oil Pipe, Hose Clamp, Oil Hose Installation Note.)

3	Connector bolt
4	Packing
5	Oil pipe
6	Packing
7	Oil cooler (See 05–17–38 Oil Cooler Installation Note.)

Oil Cooler Installation Note

1. The automatic transaxle oil cooler flushing must be performed whenever a transaxle is removed for service because the existing fluid may be contaminated, and to prevent contamination of new fluid.

   Note
   - Flushing must be performed after installation of the overhauled or replaced transaxle.

2. Follow the instructions in the manufacturer's publication for flushing operation.

Oil Pipe, Hose Clamp, Oil Hose Installation Note

1. Apply compressed air to the cooler-side opening, and blow any remaining grime and foreign material from the cooler pipes. Compressed air should be applied for no **less than 1 min**.

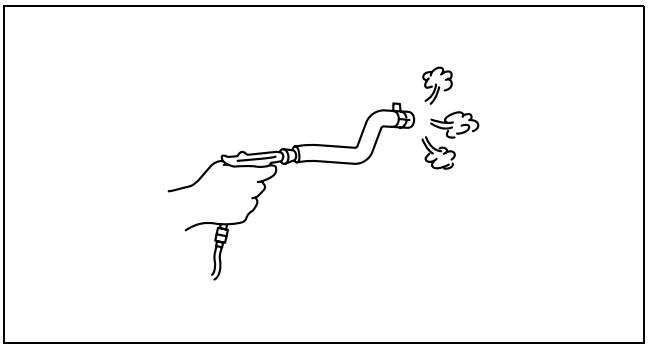

B3E0517W080

2. Align the marks, and slide the oil hose onto the oil pipe until it is fully seated as shown.

   Note
   - If reusing the hose, install the new hose clamp exactly on the mark left by the previous hose clamp. Then apply force to the hose clamp in the direction of the arrow in order to fit the clamp in place.

3. Install the new hose clamp onto the hose.
4. Verify that the hose clamp does not interfere with any other components.

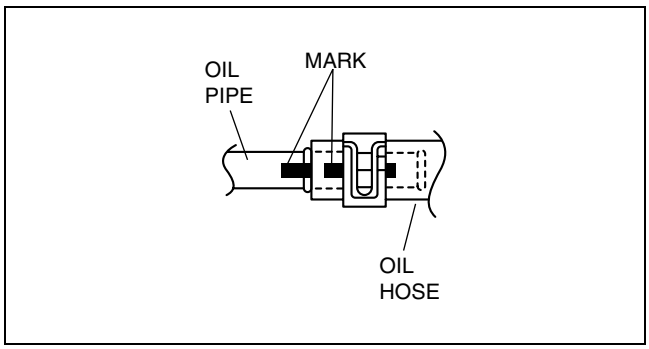

B6U0517W132

DRIVE PLATE REMOVAL/INSTALLATION [FN4A-EL]

DPE051719020W01

1. Remove the transaxle. (See 05–17–26 AUTOMATIC TRANSAXLE REMOVAL/INSTALLATION [FN4A-EL].)
2. Remove in the order indicated in the table.
3. Install in the reverse order of removal.

1	Drive plate mounting bolts (See 05–17–39 Drive Plate Mounting Bolts Removal Note.)
2	Backing plate
3	Drive plate (See 05–17–39 Drive Plate Installation Note.)

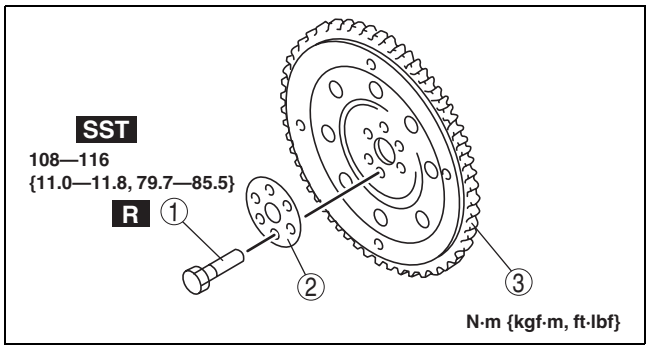

DPE517ZW1009

Drive Plate Mounting Bolts Removal Note

1. Set the **SST** or equivalent against the drive plate.
2. Remove the bolts and the drive plate.

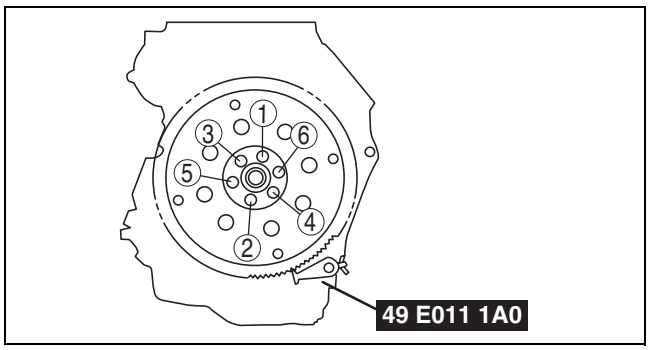

C3U0517W046

Drive Plate Installation Note

1. Remove the sealant from the bolt holes in the crankshaft and from the drive plate mounting bolts.
2. Install the drive plate.
3. Install the backing plate.
4. Set the **SST** or equivalent against the drive plate.
5. Tighten the drive plate mounting bolts in two or three steps in the order as shown in the figure.

   Tightening torque
   108—116 N·m {10.0—11.8 kgf·m, 79.7—85.5 ft·lbf}

6. Install the transaxle. (See 05–17–26 AUTOMATIC TRANSAXLE REMOVAL/INSTALLATION [FN4A-EL].)

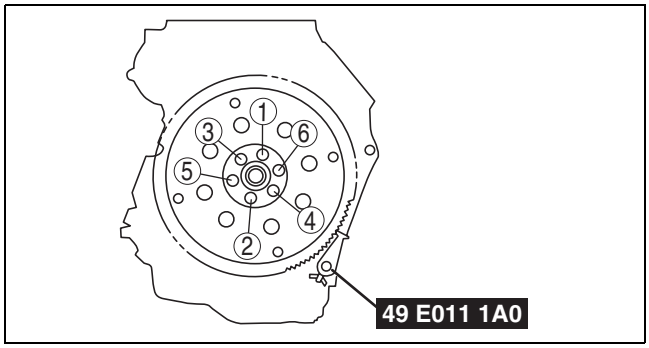

C3U0517W047

05–18 AUTOMATIC TRANSAXLE SHIFT MECHANISM

AUTOMATIC TRANSAXLE SHIFT MECHANISM LOCATION INDEX. 05–18–1
SHIFT-LOCK INSPECTION 05–18–2
SHIFT-LOCK SOLENOID INSPECTION. 05–18–2
EMERGENCY OVERRIDE BUTTON INSPECTION. 05–18–2
KEY INTERLOCK SOLENOID INSPECTION 05–18–2
SELECTOR LEVER INSPECTION. 05–18–3
SELECTOR LEVER COMPONENT INSPECTION 05–18–4
SELECTOR CABLE ADJUSTMENT 05–18–4
SELECTOR LEVER COMPONENT REMOVAL/ INSTALLATION. 05–18–5

AUTOMATIC TRANSAXLE SHIFT MECHANISM LOCATION INDEX

DPE051846010W01

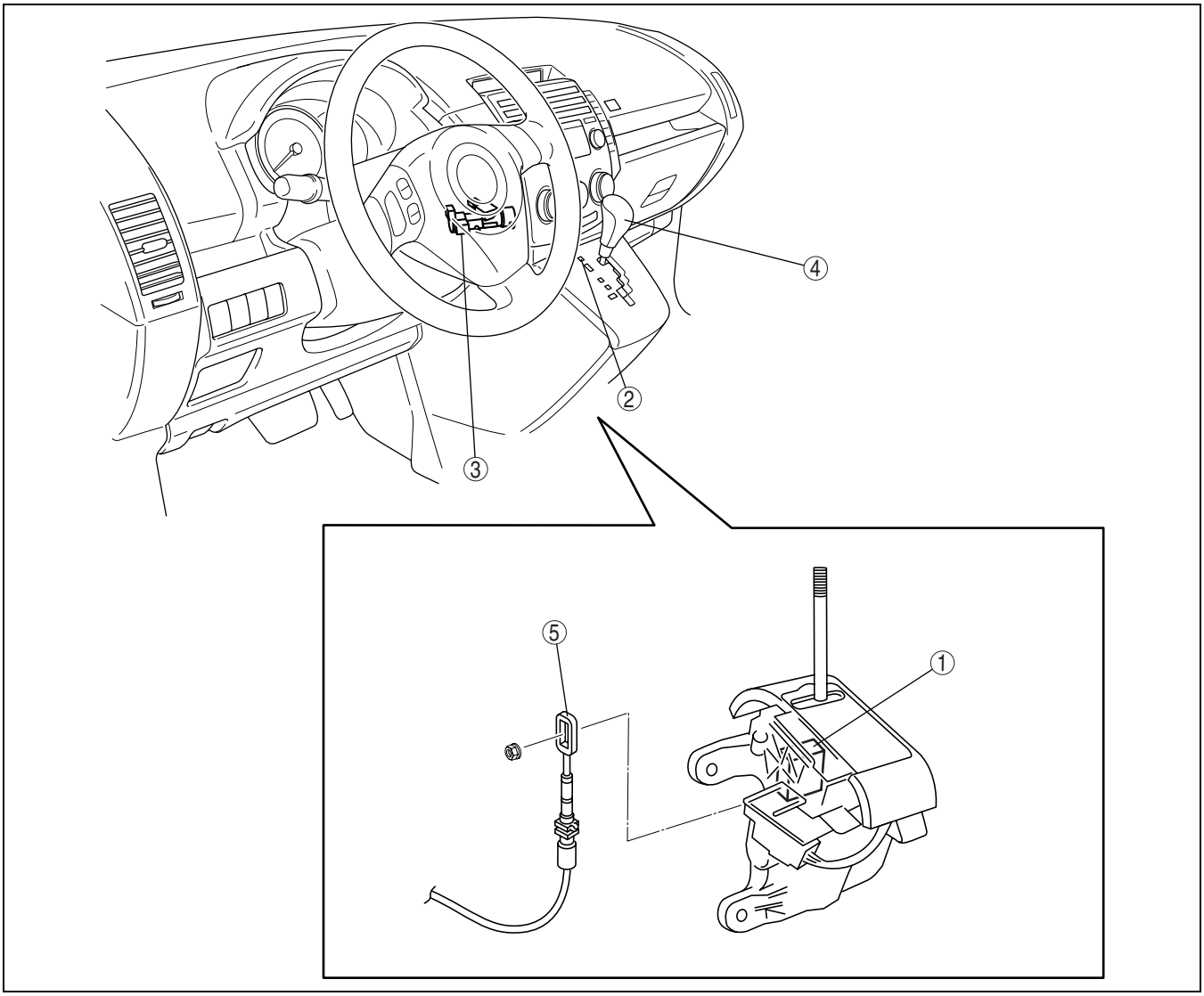

DPE518ZW1001

1	Shift-lock solenoid (See 05–18–2 SHIFT-LOCK INSPECTION.) (See 05–18–2 SHIFT-LOCK SOLENOID INSPECTION.)
2	Emergency override button (See 05–18–2 EMERGENCY OVERRIDE BUTTON INSPECTION.)
3	Key interlock solenoid (See 05–18–2 KEY INTERLOCK SOLENOID INSPECTION.)
4	Selector lever (See 05–18–3 SELECTOR LEVER INSPECTION.) (See 05–18–4 SELECTOR LEVER COMPONENT INSPECTION.) (See 05–18–5 SELECTOR LEVER COMPONENT REMOVAL/INSTALLATION.)
5	Selector cable (See 05–18–4 SELECTOR CABLE ADJUSTMENT.)

SHIFT-LOCK INSPECTION

DPE051830000W01

1. Turn the ignition switch to the ON position (engine off).
2. Verify that the selector lever is in the P position.
3. Without the brake pedal depressed, verify that the selector lever cannot be shifted from the P position.
4. Depress the brake pedal and verify that the selector lever can be shifted from the P position.
   - If there is any malfunction, inspect the selector lever component. (See 05–18–4 SELECTOR LEVER COMPONENT INSPECTION.)

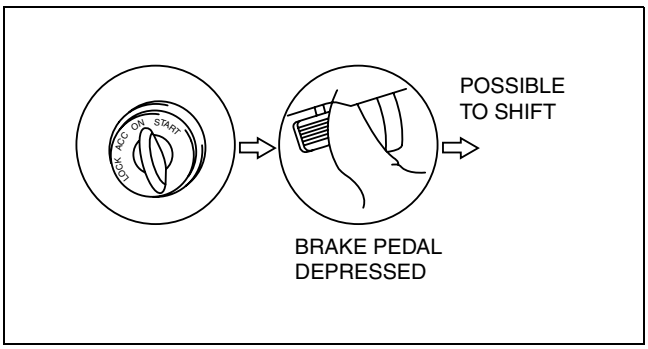

C3U0518W004

SHIFT-LOCK SOLENOID INSPECTION

DPE051830000W02

1. Remove the battery duct and battery cover. (See 01–17A–1 BATTERY REMOVAL/INSTALLATION [L8, LF].)
2. Disconnect the negative battery cable.
3. Remove the following parts:
   (1) Side wall
   (2) Selector lever knob
   (3) Indicator panel
   (4) Console
4. Disconnect the selector lever component connector.
5. Measure the continuity between terminals I and K.
   - If there is any malfunction, replace the selector lever component. (See 05–18–5 SELECTOR LEVER COMPONENT REMOVAL/INSTALLATION.)

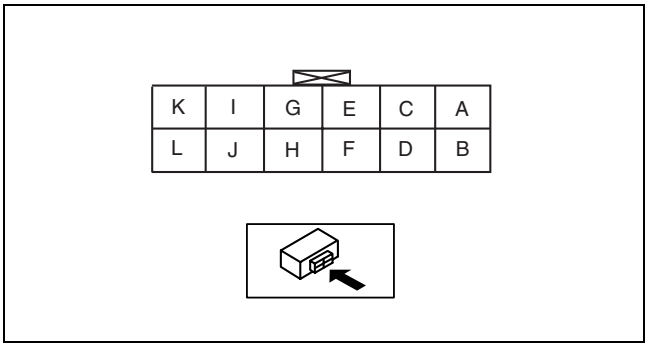

B3E0518W003

EMERGENCY OVERRIDE BUTTON INSPECTION

DPE051830000W03

1. Turn the ignition switch to the LOCK position.
2. Verify that the selector lever is in the P position.
3. Without the brake pedal depressed, verify that the selector lever cannot be shifted from the P position.
4. Remove the panel cover using a tape-wrapped flathead screwdriver as shown in the figure.
5. Insert the flathead screwdriver into the emergency override hole and push it down.
6. Verify that the selector lever can be shifted from the P position.
   - If there is any malfunction, replace the selector lever component. (See 05–18–5 SELECTOR LEVER COMPONENT REMOVAL/INSTALLATION.)

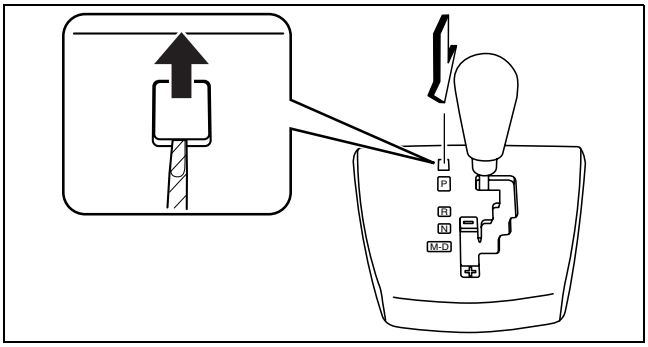

DPE518ZW1002

KEY INTERLOCK SOLENOID INSPECTION

DPE051809000W01

1. Remove the battery duct and battery cover. (See 01–17A–1 BATTERY REMOVAL/INSTALLATION [L8, LF].)
2. Disconnect the negative battery cable.
3. Remove the column cover. (See 09–17–7 COLUMN COVER REMOVAL/INSTALLATION.)
4. Disconnect the key interlock solenoid connector.
5. Measure the continuity between terminals A and B.

Normal key type

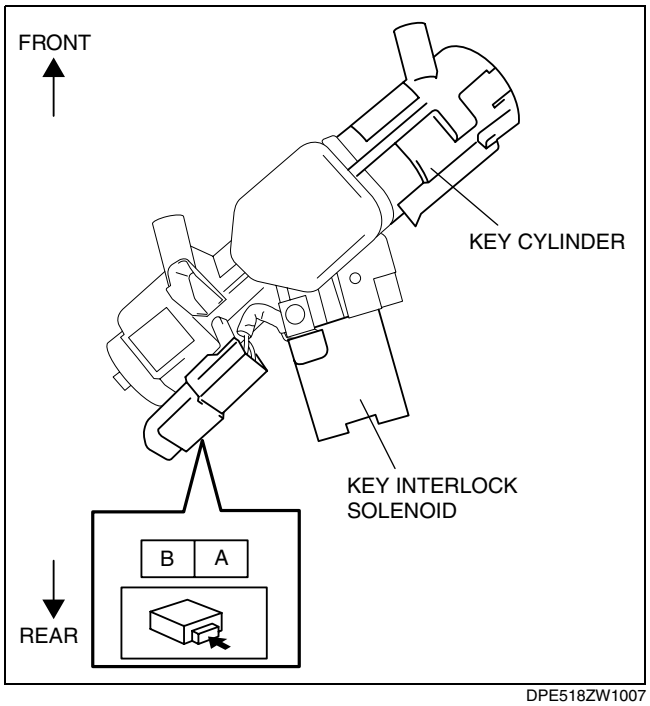

DPE518ZW1007

Advanced keyless type

- If there is any malfunction, replace the key cylinder. (See 06-14–7 STEERING WHEEL AND COLUMN REMOVAL/INSTALLATION.)

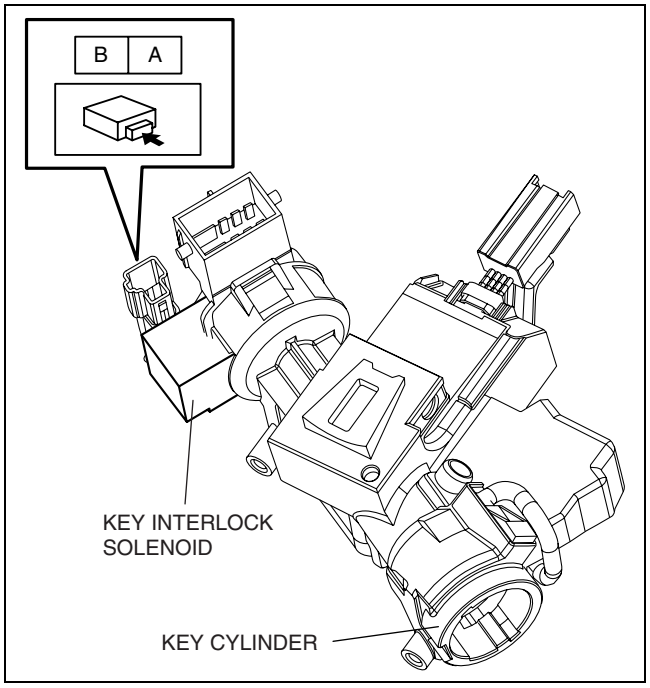

DPE518ZW1003

SELECTOR LEVER INSPECTION

DPE051846102W01

1. Turn the ignition switch to the ON position (engine OFF).
2. With the brake pedal depressed, verify that there is a “click” at each range when shifted.
3. Verify that the selector lever can be shifted.
4. Verify that there is a “click” at each position when shifted from P position to M range.

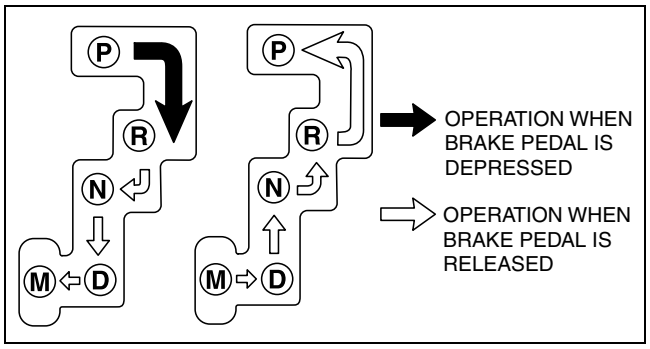

CHU0514W002

5. Verify that the positions of the selector lever and the indicator are aligned.
   - If there is any malfunction, adjust the selector cable and TR switch. (See 05–18–4 SELECTOR CABLE ADJUSTMENT.) (See 05–17–14 TRANSAXLE RANGE (TR) SWITCH ADJUSTMENT [FN4A-EL].)
6. Verify that the vehicle operates in each selected range.

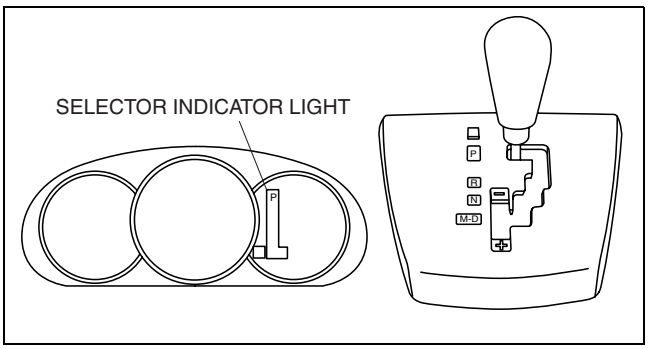

DPE517ZW1003

SELECTOR LEVER COMPONENT INSPECTION

DPE051846102W02

1. Remove the battery duct and battery cover. (See 01–17A–1 BATTERY REMOVAL/INSTALLATION [L8, LF].)
2. Disconnect the negative battery cable.
3. Remove the following parts:
   (1) Side wall
   (2) Selector lever knob
   (3) Indicator panel
   (4) Console
4. Disconnect the selector lever component connector.
5. Verify that the continuity is as indicated in the table.
   - If there is any malfunction, replace the selector lever component. (See 05–18–5 SELECTOR LEVER COMPONENT REMOVAL/INSTALLATION.)

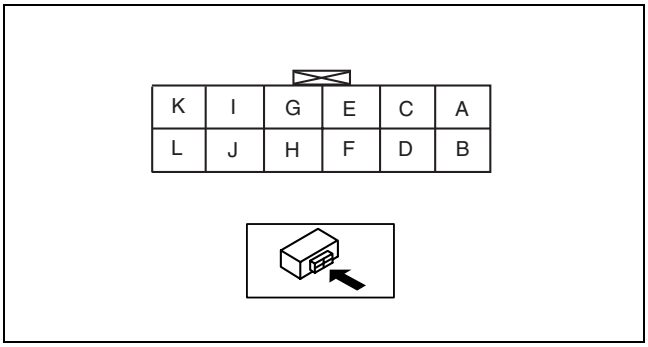

B3E0518W003

○——○ : Continuity

Selector lever position/range		Connector terminal											
		A	B	C	D	E	F	G	H	I	J	K	L
M range	- M			○	—	—	—	—	○				
	Center M	○	—	—	—	—	—	—	○				
	+ M		○	—	—	—	—	—	○				
Except P position										○	—	○	

DPE518ZW1004

SELECTOR CABLE ADJUSTMENT

DPE051846102W03

1. Remove the following parts:
   (1) Side wall
   (2) Selector lever knob
   (3) Indicator panel
   (4) Console
2. Shift the selector lever to the P position.

3. Loosen the nut of the selector cable end (selector lever component side).
4. Verify that the manual shaft is in the P position.
5. Install the nut of the selector cable end in such a way that the selector lever does not bear a load.

   Tightening torque
   10—15 N·m {1.1—1.5 kgf·m, 7.4—11.0 ft·lbf}

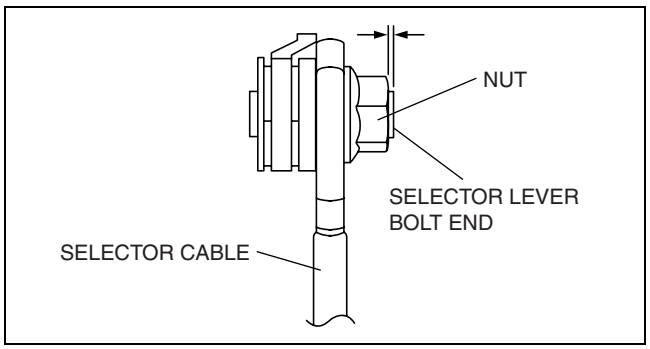

DPE518ZW1005

6. Verify that the selector lever bolt end is exposed from the nut.
7. Install the following parts:
   (1) Console
   (2) Indicator panel
   (3) Selector lever knob
   (4) Side wall
8. Shift the selector lever from the P position to M range, and make sure that there are no other components in that area to interfere with the lever.

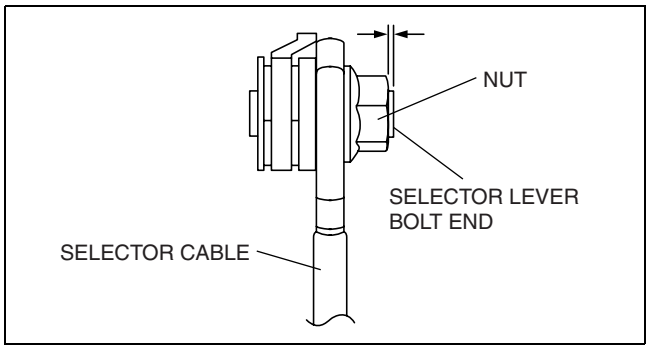

DPE518ZW1005

SELECTOR LEVER COMPONENT REMOVAL/INSTALLATION

DPE051846102W04

1. Remove the battery duct and battery cover. (See 01–17A–1 BATTERY REMOVAL/INSTALLATION [L8, LF].)
2. Disconnect the negative battery cable.
3. Remove the following parts:
   (1) Battery, battery box and battery tray (See 01–17A–1 BATTERY REMOVAL/INSTALLATION [L8, LF].)
   (2) Air cleaner component (See 01–13A–4 INTAKE AIR SYSTEM REMOVAL/INSTALLATION [L8, LF].)
   (3) Side wall
   (4) Heat insulator (front and center)
4. Remove in the order indicated in the table.

5. Install in the reverse order of removal.

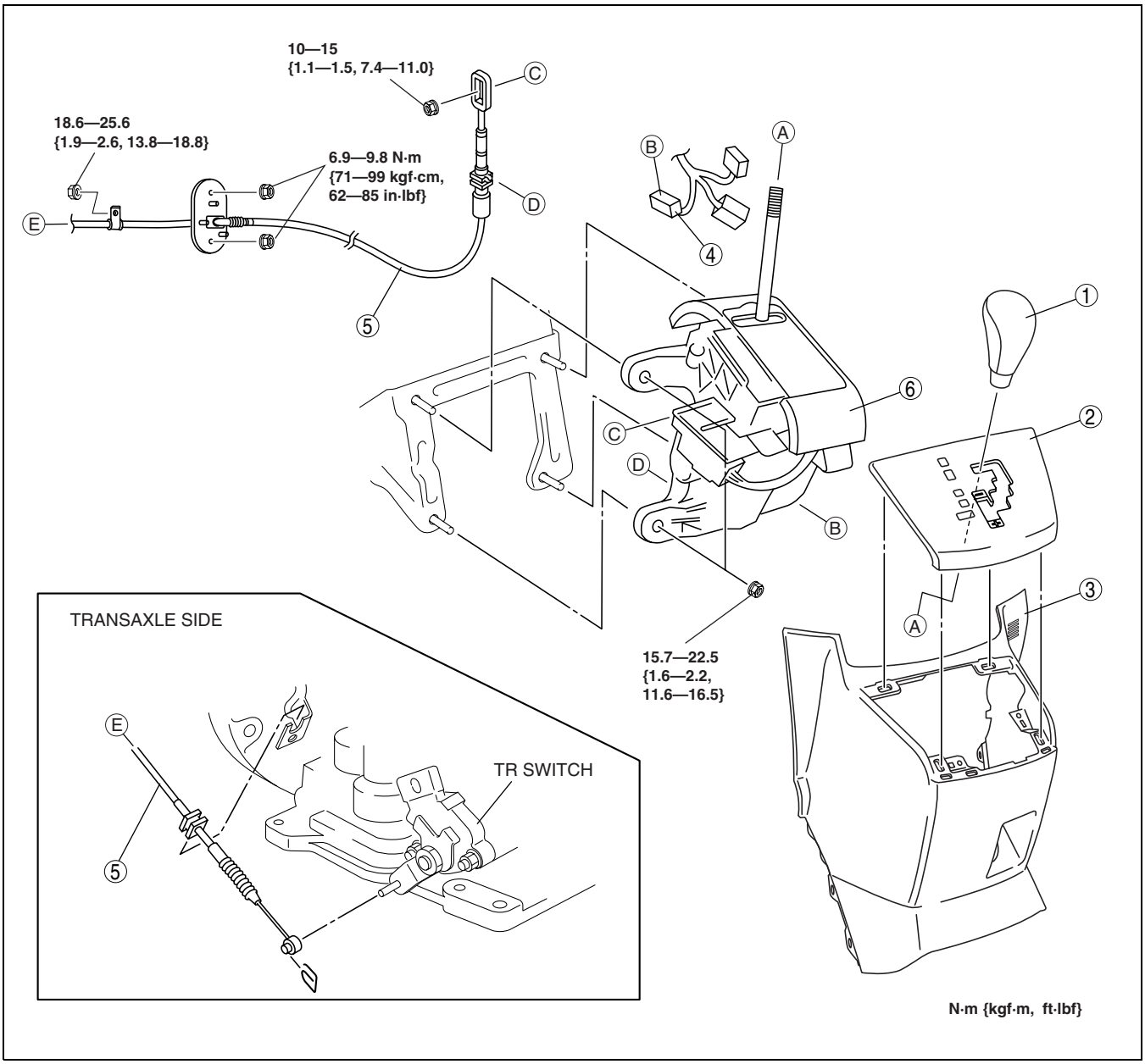

DPE518ZW1006

1	Selector lever knob
2	Indicator component
3	Console
4	Selector lever component connector

5	Selector cable (See 05–18–6 Selector Cable Removal Note.) (See 05–18–7 Selector Cable Installation Note.)
6	Selector lever component (See 05–18–7 Selector Lever Component Installation Note.)

Selector Cable Removal Note

1. Remove the clip.

2. Remove the selector cable.

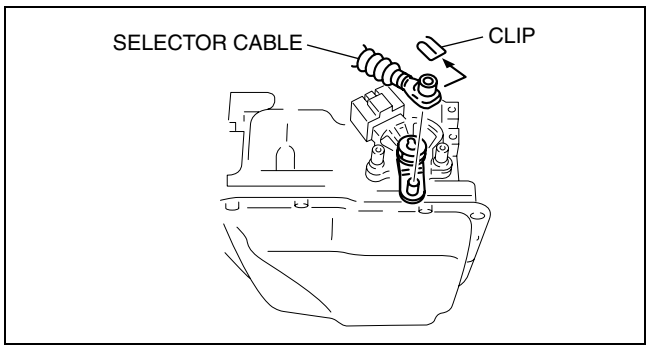

C3U0518W006

Selector Lever Component Installation Note

1. Tighten the nut in the order as shown in the figure.

   Tightening torque
   15.7—22.5 N·m {1.6—2.2 kgf·m, 11.6—16.5 ft·lbf}

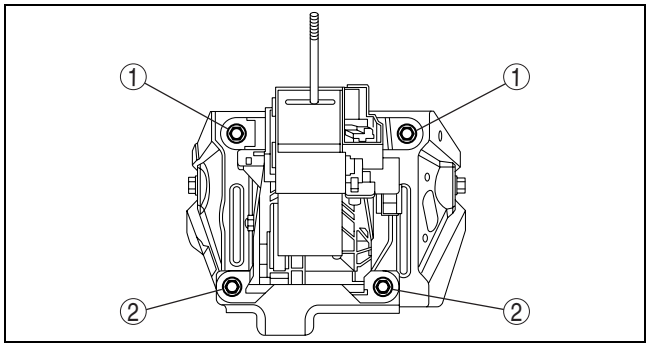

CPJ518ZWB007

Selector Cable Installation Note

1. Install the selector cable (selector lever component side) to the selector lever securely.
2. Install the selector cable (selector lever component side) to the selector lever bolt, and then temporarily tighten the nut.
3. Verify that the selector lever bolt end is exposed from the nut.
4. Verify that the selector lever is in the P position.
5. Verify that the manual shaft is in the P position.

   Caution
   - **Bending the selector cable in the manner shown in the figure will damage the cable and it may become loose when shifted. When installing the selector cable, hold it straight.**

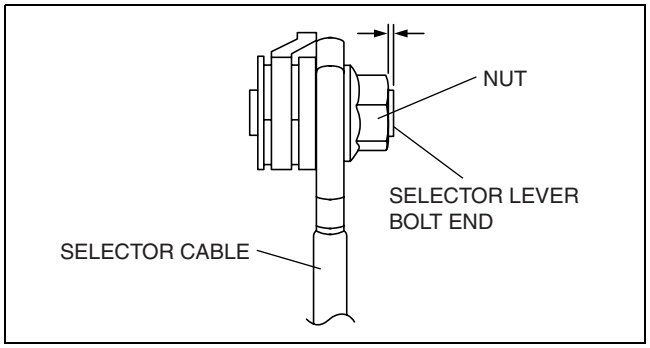

DPE518ZW1005

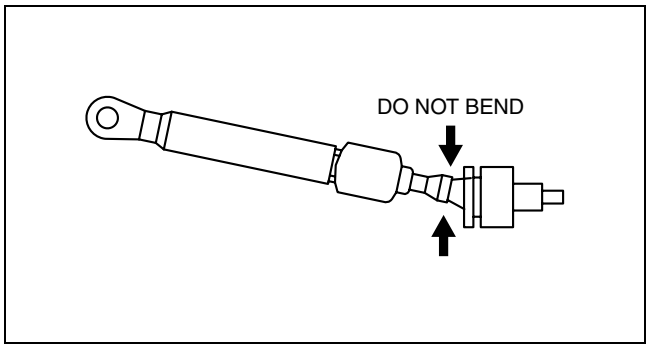

B3E0518W009

6. Install the selector cable (transaxle side) to the selector cable bracket securely.

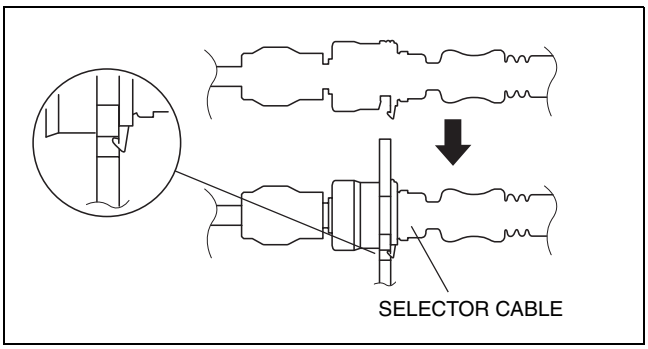

D6U518ZW7005

7. Install the clip as shown in the figure.

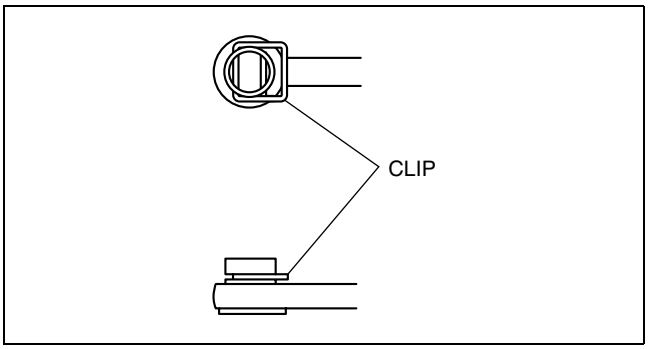

B3E0517W091

Note
- Install the selector cable to the manual shaft lever with the clip side of the selector cable end facing the front of the vehicle.

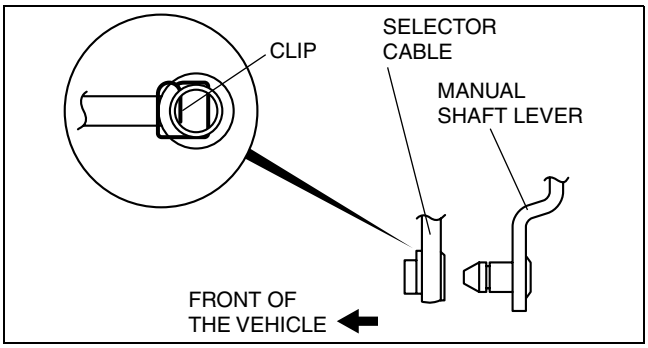

B6U0518W013

8. Install the selector cable to the manual shaft lever in such a way that the selector cable does not bear a load.
9. Verify that the manual shaft lever end is exposed from the selector cable end.
10. Install the nut completely so that no load acts on the selector lever.

Tightening torque
10—15 N·m {1.1—1.5 kgf·m, 7.4—11.0 ft·lbf}

05–50 TECHNICAL DATA

TRANSMISSION/TRANSAXLE
TECHNICAL DATA 05–50–1

TRANSMISSION/TRANSAXLE TECHNICAL DATA

DPE055000000W02

Clutch

Item				Specification
Clutch pedal	Disengagement point	Disengagement stroke	(mm {in})	90—110 {3.55—4.33} (Reference value)
		Pedal stroke	(mm {in})	135 {5.31} (Reference value)
Clutch cover	Diaphragm spring fingers	Depth	(mm {in})	1.0 {0.039}
		Misalignment	(mm {in})	1.0 {0.039}
	Maximum clearance of flatness of the pressure plate		(mm {in})	0.5 {0.020}
Clutch disc	Minimum depth between the lining surface and the rivet head		(mm {in})	0.3 {0.012}
	Runout limit		(mm {in})	0.7 {0.028}
Flywheel	Runout limit		(mm {in})	0.1 {0.004}
Clutch fluid	Type			SAE J1703, FMVSS 116 DOT-3 or DOT-4

Manual Transaxle [G35M-R]

Item			Specification
Oil	Grade		API Service GL-4 or GL-5
	Viscosity	All-season	SAE 75W-90
		Above 10 °C {50 °F}	SAE 80W-90
	Capacity (approximate quantity) (L {US qt, Imp qt})		2.87 {3.03, 2.53}

Manual Transaxle [A26M-R]

Item			Specification
Oil	Grade		API Service GL-4 or GL-5
	Viscosity	All-season	SAE 75W-90
		Above 10 °C {50 °F}	SAE 75W-90
	Capacity (approximate quantity) (L {US qt, Imp qt})		2.55 {2.69, 2.24}

Automatic Transaxle [FN4A-EL]

Item	Specification
Time lag	N position→D range: 0.4—0.7 s N position→R position: 0.4—0.7 s
ATF	Type: ATF M-V or equivalent Capacity (Approx. quantity): 7.2 L {7.6 US qt, 6.3 Imp qt}
Input/turbine speed sensor resistance	250—600 ohms (ATF temperature: –40—160 °C {–40—320 °F})
Vehicle speed sensor (VSS) voltage	4.5—5.5 V

Line pressure

Position/range		Specification (kPa {kgf/cm^2, psi})
D, M (1GR, 2GR)	Idle	330—470 {3.4—4.7, 48—68}
	Stall	1,160—1,320 {11.8—13.5, 168—191}
R	Idle	490—710 {5.0—7.2, 72—102}
	Stall	1,750—1,970 {17.8—20.1, 245—285}

Engine stall speed

Position/range	Specification (rpm)
D, M (1GR, 2GR)	2,200—2,800
R	

Transaxle range (TR) switch

Terminal	Position/Range	Resistance (ohm)
B—C	P	4,085—4,515
	R	1,425—1,575
	N	713—788
	D	371—409

Transaxle fluid temperature (TFT) sensor

ATF temperature (°C {°F})	Resistance (kilohm)
–20 {–4}	236—324
0 {32}	84.3—110
20 {68}	33.5—42.0
40 {104}	14.7—17.9
60 {140}	7.08—8.17
80 {176}	3.61—4.15
100 {212}	1.96—2.24
120 {248}	1.13—1.28
130 {266}	0.87—0.98

Solenoid valve resistance (ATF temperature: –40—150 °C {–40—302 °F}

Terminal	Solenoid valve	Resistance (ohm)
A—GND	Shift solenoid A	1.0—4.2
C—GND	Shift solenoid B	1.0—4.2
G—GND	Shift solenoid C	1.0—4.2
B—GND	Shift solenoid D	10.9—26.2
F—GND	Shift solenoid E	10.9—26.2
D—I	Pressure control	2.4—7.3

05–60 SERVICE TOOLS

TRANSMISSION/TRANSAXLE SST. . . . 05–60–1

TRANSMISSION/TRANSAXLE SST

DPE056000000W01

1: Mazda SST number
2: Global SST number
Example

1:49 UN30 3009 2:303-009 Crankshaft damper remover	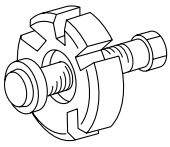

1:49 UN30 8157 2:308-157 Pilot bearing installer 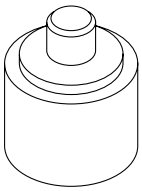	1: 49 E027 002 2: – Attachment 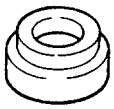	1: 49 G030 797 2: – Handle 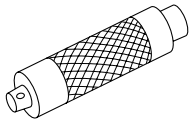
1:49 UN20 5153 2:205-153 Handle 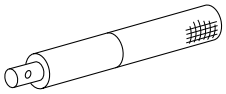	1:49 E011 1A0 2: – Ring gear brake set 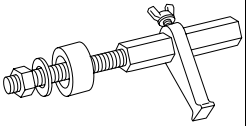	1:49 SE01 310A 2: – Clutch disc centering tool 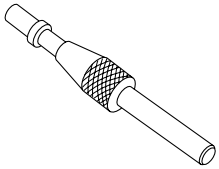
1:49 1285 071 2: – Bearing puller 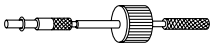	1:49 G030 795 2: – Oil seal installer 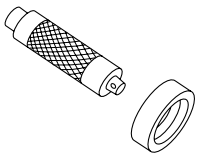	1:49 C017 5A0 2: – Engine support set 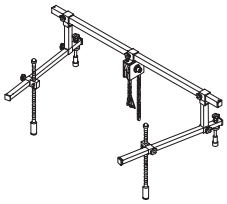
1:49 B019 901B 2: – Oil pressure gauge 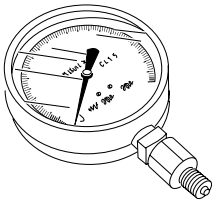	1:49 0378 400C 2: – Oil pressure gauge set 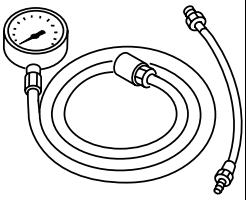	1: – 2: – WDS

05